STATE LIBRARY OF PENNSYLVANIA
3 0144 00448765 8

CLASS 620.6 BOOK En 28

VOLUME 18

PENNSYLVANIA
STATE LIBRARY

Digitized by the Internet Archive
in 2018 with funding from
This project is made possible by a grant from the Institute of Museum and Library Services as administered by the Pennsylvania Department of Education through the Office of Commonwealth Libraries

https://archive.org/details/vol18proceedings00engi

PROCEEDINGS

OF

THE ENGINEERS' CLUB

OF

PHILADELPHIA

VOLUME XVIII

EDITED BY THE PUBLICATION COMMITTEE

PHILADELPHIA
THE ENGINEERS' CLUB OF PHILADELPHIA
1901

INDEX.

PAGE

ABSTRACT of Minutes of Board of Directors, ...72, 133, 210, 319
of Club,.....70, 131, 208, 318
Additions to Library,.....73, 135, 212, 320
American Isthmian Canals,..... 21
Anniversary Address—Historical Sketch of Engineers' Club of Philadelphia, ... 61
Annual Address of President,..... 1
Report of Board of Directors,..... 75

Bertolett, Edwin F., Fire-proof Construction in Philadelphia, ... 177
Birkinbine, John, Duty of the Engineer to His Clients or Employers,.... 221
Discussion on Pennsylvania Forests,..... 93
Bloch, Frits, Discussion on Variations of Standards of Measurements, 127, 129, 130
Boiler, A New Type of Water-tube, ... 137
Brinton, Walter, Discussion on Variations of Standards of Measurements, 127

CHAINS and Chain Gearing, ... 100
Chimney, Notes on the Construction of a Factory,..... 174
Chimneys, Design and Construction of,..... 156
Christie, James, Discussion on Chimneys, ...171, 172, 173
Duty of the Engineer,..... 242
Interchangeable Gearing, ... 59
High-speed Toothed Gearing, ... 43
Topography and Hydrography of the Isthmian Region, 21
Clarke, J. O., Discussion on Variations of Standards of Measurements,.....125, 127, 130
Codman, John E., Discussion on Pennsylvania Forests,..... 95

DESIGN and Construction of Factory Chimneys, ... 156
Duty of the Engineer to Himself and His Profession, ... 213
His Clients or Employers,..... 221
His Contractors and Employees,..... 227
the Public,..... 234

16233

PAGE

Eddowes, A. B., Some Unusual Locomotives, ... 276
Engineering Features of Nicaragua Route, ... 32
Engineers' Club of Philadelphia, Historical Sketch of, ... 61
Expanded Metal in Fire-proof Construction, ... 200

Falkenau, A., Discussion on Duty of the Engineer, ... 245
Field Engineering, Variations of Standards of Measurements Employed in, ... 118
Fire-proof Construction, Expanded Metal in, ... 200
in Philadelphia, ... 177
Franklin, Benjamin, Variations and Uses of the Standards of Measurements Employed in Field Engineering, ... 118
Furber, Wm. Copeland, Discussion on Chimneys, ... 171
Duty of the Engineer, ... 243
Fire-proof Construction, ... 198

GEARING, High-speed Toothed, ... 43
Interchangeable, ... 51
Geyelin, Emile C., Obituary of, ... 68
Graves, E., Discussion on Interchangeable Gearing, ... 56

Hering, Carl, Discussion on Some Unusual Locomotives, ... 315
High-speed Toothed Gearing, ... 43
Historical Sketch of Engineers' Club of Philadelphia, ... 61
Holcombe, A. H., Discussion on Duty of the Engineer, ... 246
Hubbard, I. Wendell, Construction of a Factory Chimney, ... 174

INTERCHANGEABLE Gearing, ... 51
Isthmian Region, Topography and Hydrography of, ... 21

Leffmann, Henry, Discussion on Pennsylvania Forests, ... 94
Some Unusual Locomotives, ... 316
Lewis, Wilfred, Interchangeable Gearing, ... 51
Livingston, Max, Discussion on Duty of the Engineer, ... 247
Locomotives, Some Unusual, ... 276
Lowland Protections, Practical Building of, ... 248

Maignen, P. J. A., Discussion on Pennsylvania Forests, ... 98
Marburg, Edgar, Anniversary Address—Sketch of Engineers' Club of Philadelphia, ... 61
Discussion on Chimneys, ... 169
Some Unusual Locomotives, ... 315
Duty of the Engineer to Himself and His Profession, ... 213
Nineteenth Century Engineering, ... 1

PAGE

Measurements Employed in Field Engineering, Variations and Uses of,. 118
Merritt, James S., Expanded Metal in Fire-proof Construction, ... 200
Morris, Henry G., Parker Steam Generator,..... 138

NICARAGUA Route, Engineering Features of,..... 32
Nichols, E. M., Discussion on Variations of Measurements,..... 128
Nineteenth Century Engineering,..... 1
Notes on the Construction of a Factory Chimney,..... 174

PANAMA Route, ... 38
Parker, John C., Science of Steam-making,..... 147
Steam Generator,..... 137
Pennsylvania Forests and What is Necessary to Restoration,..... 79
Philadelphia, Engineers' Club of, Historical Sketch of, ... 61
Piez, Charles, Chains and Chain Gearing,..... 100
Practical Building of Lowland Protections,..... 248

Rondinella, L. F., Discussion on Chains and Chain Gearing, ... 116
Chimneys, ...171, 172
Interchangeable Gearing,..... 57, 59
Rothrock, Joseph T., Pennsylvania Forests and their Restoration, ... 79

Schermerhorn, L. Y., Discussion on Chains and Chain Gearing,..... 116
Pennsylvania Forests,..... 96
Practical Building of Lowland Protections, ... 248
Some Unusual Locomotives,..... 316
Duty of the Engineer to His Contractors and Employees, ... 227
Panama Route,..... 38
Schumann, Francis, Design and Construction of Factory Chimneys,..... 156
Discussion on Variations of Measurements, ... 128
Science of Steam-making,..... 147
Smith, Edwin F., Engineering Features of Nicaragua Route,..... 32
Snell, Henry I., Discussion on Chimneys,.....172, 173
Some Unusual Locomotives,..... 276
Spackman, Henry S., Discussion on Chains and Chain Gearing,..... 116
Sweeney, Frank, Discussion on Chimneys,..... 169–172

TOPOGRAPHY and Hydrography of Isthmian Region,..... 21
Trautwine, Jr., John C., Discussion on Pennsylvania Forests,..... 98
Variations of Measurements,.. 128
Duty of the Engineer to the Public,..... 234
Trinks, W., Discussion on Interchangeable Gearing,..... 60

PAGE

VARIATIONS and Uses of the Standards of Measurements Employed in Field Engineering,..... 118

Webb, Walter L., Discussion on Some Unusual Locomotives,..... 316
Wilson, Percy H., Practical Building of Lowland Protections,..... 248

Edgar D. Marburg.

TWENTY-THIRD PRESIDENT OF THE CLUB,
JANUARY 20, 1900—JANUARY 19, 1901.

Editors of other technical journals are invited to reprint articles from this journal, provided due credit be given the PROCEEDINGS.

PROCEEDINGS

OF

THE ENGINEERS' CLUB

OF PHILADELPHIA.

ORGANIZED DECEMBER 17, 1877. INCORPORATED JUNE 9, 1892.

NOTE.—The Club, as a body, is not responsible for the statements and opinions advanced in its publications.

Vol. XVIII. FEBRUARY, 1901. No. 1.

NINETEENTH-CENTURY ENGINEERING: ITS EVOLUTION, AND SOMETHING OF ITS BEGINNINGS IN AMERICA.

ADDRESS BY THE RETIRING PRESIDENT,

EDGAR MARBURG.

Read January 19, 1901.

ENGINEERING, in its modern and highest sense, had its birth in the nineteenth century when science became its spirit. The history of science,—its early birth, its long slumber, its awakening scarce four centuries ago, its rapid rise, and, finally, its beneficent union with the arts in the century just closed,—forms one of the most impressive chapters in the annals of the human race. It is the later phases of this development upon which I shall chiefly dwell; yet, for a true perspective, the story must be traced from its beginning.

Science received its first vigorous impulse during the third and fourth centuries before the dawn of the Christian era. Aristotle and Archimedes—twin luminaries of the ancient scientific world—were its chief exponents. In the sense that Aristotle may be called the father of philosophy, Archimedes was the parent of mechanics. The one concerned himself more with the abstract; the other, with the concrete. While Aristotle formulated philosophic theories, at once profound and fanciful, and all-embracing in their scope, Archimedes' teachings were addressed straight to men's reason. Yet the Aristotelian philosophy, in form much mutilated and perverted, was destined to hold sway for

well-nigh twenty centuries. Throughout this epoch fantastic speculations passed for science, scholars concealed their ignorance behind a veil of mysticism, and their disciples accepted in reverent faith false dogmas handed down through ages. The application of the principles of science to the practice of what were called the sordid arts was held in contemptuous disdain by the learned as a desecration of science. Inductive methods of investigation were similarly despised: if facts did not accord with philosophic theories, so much the worse for the facts.

Thus steeped in ignorance and superstition stood the world at the dawn of the sixteenth century. Exact science had made no progress since the days of Archimedes. Then came the intellectual awakening. Slowly at first, but surely, the clouds were lifted and science was liberated from its encircling maze of metaphysical obscurities. The leaders in the crusade, Copernicus, Galileo, and their followers, met with fierce denunciation for their heresies. But though the authors did not escape the ridicule and persecution of their times, their works lived after them. A new school of philosophers sprang up; the light of science had been rekindled. Its expounders grew more and more audacious, until in the end their position became impregnable. But the breaking down and stamping out of the time-honored dogmas and superstitions was still the work of centuries.

To recount, even in the barest outline, the chief discoveries of the illustrious line of scientists who cleared the way, during the sixteenth, seventeenth, and eighteenth centuries, for the triumphs of our age would far transcend the limits of my narrative, and were indeed foreign to its purpose. The important fact is to be held in view, however, that up to the beginning of the present century, science—notwithstanding its brilliant progress—had made relatively little impress upon the arts. Engineering, the special subject of our inquiry, was then, as it had ever been, the art and not the science and art of construction; and was dependent, as it had ever been, upon precedent, empiricism, or bold initiative without the adventitious aid of science. Practice and theory, so far as the latter had been developed, were still separated by a formidable gulf. Science was esoteric; its writings were fragmentary, comparatively inaccessible, largely in Latin, and unknown or unintelligible to men of practical training. Moreover, the theory underlying such fundamental matters as the resistance of materials, the

stability of structures, the flow of fluids, the efficiency of motors, had been inadequately developed or involved errors and misconceptions to such extent as to render it unfit for the needs of practice. Such few experiments as had been made to test the validity of theoretic laws had necessarily been conducted on a small scale with crude appliances. That elusive, ever-varying, but indispensable, bond between theory and practice—the empiric constant—had scarcely an existence.

Such, in brief outline, were the conditions at the opening of the nineteenth century, nor might they have been essentially different at its close but for the discovery of the potentialities of steam. It were, indeed, an interesting field for speculation to fancy what the world would be to-day had Watt's invention been deferred another century; or, on the other hand, to consider how greatly its exploitation would have been retarded had it been given to the world three centuries earlier, when science existed in little more than name.

Although it is impossible in our day to gain a just conception of life a century ago, yet it will at least conduce to a better understanding for present purposes to notice briefly the state of transportation in England and America during the period immediately antedating the age of steam.

The history of barge canal navigation in England dates only from 1759, when the first Act was passed authorizing the construction of a canal from Worsley to Manchester. It was a prodigious undertaking for its day; Francis, the Duke of Bridgewater, was its patron; James Brindley, the engineer. Some curious glimpses of the times may be had from Smiles' "Life of Brindley." Manchester was then an active manufacturing town of 20,000 inhabitants, in which all operations of manufacture were carried on by hand. The surrounding conditions were fairly typical of inland towns in England at that period. The roads out of Manchester were so wretched that the traffic had to be carried on largely by pack-horses. Much suffering resulted, especially in winter, from the frequent scarcity of food and dearness of fuel for want of transportation, although coal abounded within a short distance of the town. Smiles writes in 1864: "It is difficult now to realize the condition of the poor, in remote districts of England, at that time. In winter they shivered over scanty wood-fires, for timber was almost as scarce and as dear as coal. Fuel was burnt only at cooking times or to cast a glow about the hearth in the winter even-

ings. The fire-places were little apartments of themselves, sufficiently capacious to enable the whole family to sit within the wide chimney. Fortunate were the villagers who lived hard by a bog or a moor, from which they could cut peat or turf at will. They ran all risks of ague and fever in summer, for the sake of the ready fuel in winter. But in places remote from bogs and scantily timbered, existence was scarcely possible; and hence the settlement and cultivation of the country were in no slight degree retarded until better communications were opened up."

Nevertheless, the first canal projects in England evoked a storm of ridicule and opposition, as did the railways a half-century later. Some denounced the scheme as visionary and impracticable; others predicted that the country would be ruined, that estates would suffer irreparable damage, that inland navigation would destroy the coasting trade, that the canals would drain the water from the rivers, and that the many owners and drivers of wagons and pack-horses would be wrongfully deprived of their living. An engineer consulted by the Duke on Brindley's plan of spanning the Irwell by an aqueduct, condemned the same as wholly impracticable, closing with the caustic observation: "I have often heard of castles in the air, but never before saw where any of them were to be erected." Within less than two years the canal had been completed as projected, and the "castle in the air" had become a thing of stone and mortar. Contemporary writers referred to it glowingly as a "river hung in the air" and as "perhaps the greatest artificial curiosity in the world, visited daily by crowds of people, including those of the first fashion." It is related that "most of the laborers employed upon the work were of a superior class, and some of them were 'wise' or 'cunning men,' blood-stoppers, herb-doctors, planet-rulers and the like, whose very superstitions made them thinkers and calculators."

Notwithstanding the complete success of the undertaking and the immediate benefits that followed, the opposition was by no means pacified. In some later projects, planned on a larger scale, it was proposed, as a conciliatory measure, that the canal should not be carried nearer than within four miles of any important town, so that the carriers and horses might not be thrown out of employment.* A

* "The Advantages of Inland Navigation," by R. Whitworth, 1766.

number of towns were thus left high and dry, to the serious injury, as they soon perceived, of their own interests.

The physical difficulties surmounted in the construction of these new arteries of travel and commerce, by expedients equally bold and ingenious, are among the most notable achievements in the earlier history of engineering, to which justice can not be done by a brief recital. A gentleman of the period—an eye-witness to the construction of one of the great tunnels in 1767—was moved to refer to the subterranean navigation as the "eighth wonder of the world," and informs his correspondent that "the great Mr. Brindley handles rocks as you would plum-pies, and makes the four elements subservient to his will." The engineers of our day may find some comfort in the knowledge that the wizard thus eulogized—without whose services a work costing the then stupendous sum of 220,000 pounds could scarcely have been carried to a successful issue—received a compensation at no time exceeding 3*s.* 6*d.* a day. This was the unlettered genius of whom Carlyle wrote: "The ineloquent Brindley, behold he has chained seas together; his ships do visibly float over valleys, invisibly through the heart of mountains; and the Mersey and the Trent, the Humber and the Severn, have shaken hands."

These earlier works, aside from their immense commercial value to the districts traversed, proved so remunerative to their owners that similar enterprises were started on all sides. Before the close of the century, England had been channeled in all directions, and the kingdom stood on the verge of a canal craze. Then came the usual chapter of overspeculation and stock-jobbing, with its invariable sequel of panic and bankruptcy. But these temporary evils were as nothing in contrast with the lasting benefits conferred upon the people —especially the poorest and most dependent classes—through the betterment of transportation.

In America the conditions at that early period were very different. When the colonies had emerged from their long struggle for independence, the question of improved transit pressed with doubled force. The settlements were widely scattered; the highways which threaded the intervening wilderness were in a state wretched beyond description; but the country was impoverished and public improvements on a larger scale were for the time impossible. Stages, retired for the most part during the war, resumed their lumbering course between

distant towns. Rivers were crossed in row-boats and clumsy scows. At times of wind and ice the passage was fraught with peril. To go from Philadelphia to Boston meant an arduous journey of nine days. The traveler was cooped in the stage for eighteen hours out of the twenty-four, not counting the intervals of freedom during which he lent a hand at extricating the heavy vehicle from a rut. The tour from Philadelphia to New York usually occupied three days, although as early as 1766 a vehicle, dubbed the flying machine, "being a good wagon with seats on springs," was announced to make the trip in the remarkable time of two days, though not without an increased charge.* Who will say but that our own "cannon-ball express" will in its turn provoke the indulgent smile of future generations?

Canals had at that time no existence in America. Long before the Revolutionary War, far-sighted men had, indeed, perceived their economic value, and general locations had been proposed; but nothing decisive had resulted. As early as 1690 William Penn had conceived the idea of connecting the Schuylkill with the Susquehanna.† In 1762, or nearly three-quarters of a century later, an actual survey of this route was made by David Rittenhouse.‡ George Washington had planned to join the waters of his favorite Potomac with the Ohio, with a view not only of providing a better outlet for the commerce of the West, but of diverting the northern fur trade from Montreal to Alexandria.

The war set for a time an end to all such schemes; but soon upon its close canal construction was actively initiated. As early as 1785 the Potomac Company was incorporated, with Washington himself as President, for the improvement of navigation on the Potomac. The Santee Canal, to connect the Santee River with Charleston harbor, was chartered in the year following. This canal, twenty-two miles in length and completed in 1800, had the distinction of being the first artificial waterway for inland navigation in America, and the misfortune of proving unsuccessful. The Schuylkill and Susquehanna Navigation Company and the Delaware and Schuylkill Navigation

---

* McMaster's "History of the People of the United States."

† William Penn's "Proposals for a Second Settlement in the Province of Pennsylvania" (1690).

‡ Watson's "Annals of Philadelphia."

Company were incorporated in 1791 and 1792 respectively. After a joint expenditure of nearly half a million dollars both companies found themselves in financial straits, and construction had to be abandoned. Long afterward their interests were merged and the work was finally completed as the Union Canal in 1827. In January, 1828, the first boat, the "Susquehanna," with its cargo of "black diamonds" from the coal-fields, passed the summit level.

Space does not admit of a connected account of these early navigation projects. An exception must be made, however, of an enterprise in New York which paved the way for the great Erie Canal. In 1792 the Western Inland Lock Navigation Company obtained authority by Act of Legislature to establish navigable communications from the Hudson River to Lake Ontario and to Seneca Lake. The work consisted in the improvement of existing water-courses; the circumvention of falls by locks; and the construction of a canal about two miles in length from the upper waters of the Mohawk to Wood's Creek, emptying into Oneida Lake. It is related that the committee appointed to explore the route and to prepare the preliminary estimates had so little data for their guidance that they found it expedient to send a delegation of "respectable mechanics" to examine the works then in course of construction on the Potomac.* They duplicated the serious error committed there of building the locks of wood which fell into decay within six years. Navigation from Schenectady to the Seneca Falls was opened in 1796, at a cost far exceeding the original estimate of $200,000.

Reviewing these early navigation projects in general, their history is largely one of failure—partial or complete—and of financial loss. The first efforts were directed mainly to the improvement of navigation on the rivers by the removal of obstructions, the building of sluices, and—at more difficult points—by the construction of locks. Engineering skill and money were both lacking. The cost usually far outran the estimate. The want of experience necessitated the employment of foreign engineers. Foremost among these stood William Weston, described by Watson as "a respectable, practical canal engineer, from England."

---

* "History of the Rise, Progress, and Existing Condition of the Western Canals," by Elkanah Watson (1820).

The bold conception of connecting the Hudson with Lake Erie by an independent canal can not be definitely traced to its first author.* The question began to be agitated soon after 1800. The magnitude of the undertaking seemed, however, so appalling that the matter was not taken seriously until 1808, when Resolutions were passed by the State Legislature looking to the appointment of a committee "to take into consideration the propriety of exploring, and causing an accurate survey to be made of the most eligible and direct route between the tide waters of the Hudson River and Lake Erie." To initiate this work, the modest appropriation of $600 was set aside. James Geddes, who was employed to make this survey, used an instrument made in Philadelphia by David Rittenhouse. Again nine years elapsed until, by the passage of the memorable Act of April 17, 1817, the enterprise was definitely launched. So vigorously was it prosecuted that it was completed within eight years, its total length from Albany to Buffalo representing a distance of 363 miles. Elkanah Watson, who thirty years before had been one of the first explorers and most ardent advocates of the route from the Hudson to Seneca Lake, writes in 1820: "The utmost stretch of our views was to follow the track of Nature's canal and to remove natural or artificial obstructions; but we never entertained the most distant conception of a canal from Lake Erie to the Hudson. We should not have considered it much more extravagant to have suggested the possibility of a canal to the moon." The estimated cost was somewhat less than $5,000,000. The actual amount exceeded twice that sum, borne by the State of New York single-handed, after futile efforts to secure the cooperation of the adjacent States and of the national government. The Erie canal will be forever memorable as the first great triumph of native engineering skill. Too much credit can not be given to those pioneers of our profession in America,—to Benjamin Wright, James Geddes, and their associates,—through whose talents, resourcefulness, and sound judgment success came, not as a happy chance, but as an inevitable sequel.

Let us turn now to a hasty survey of the early history of steam. In 1763 Watt conceived his master-thought, destined to revolutionize the world. After a wearisome struggle of thirteen years the first prac-

* Memoir prepared for Presentation at the Opening of the New York Canals, 1825, by Cadwallader D. Colden.

tical difficulties had been surmounted, and Watt's low-pressure, condensing engine pointed out new possibilities in the use of steam. Men's minds soon fell to exploiting these in novel channels. In 1801 Symmington used Watt's engine to propel the "Charlotte Dundas" on the Clyde. The honor of the first commercial success in steam navigation was won, however, by America, in 1807, when Fulton's "Clermont" steamed from New York to Albany. Indeed, as early as 1787, the erratic genius of John Fitch had contrived a diminutive steam craft, "The Perseverance," which made a trip up the Delaware from Philadelphia to Burlington. The first crossing of the Atlantic by steam was from West to East, in 1819, when the American vessel, the "Savannah," covered the distance from Savannah to Liverpool in twenty-five days, during eighteen of which she had proceeded under steam.

As early as 1779, an American, Oliver Evans, had constructed the first high-pressure, non-condensing engine. His application, in 1786, for a patent on the propulsion of land carriages by steam was denied by the State of Pennsylvania, the idea being regarded as preposterous. The patent was awarded later by the State of Maryland. It is estimated that in 1803 there were not more than six steam-engines in America, two of which belonged to the Philadelphia waterworks. These engines as well as their boilers were made largely of wood.*

At the beginning of the century, Trevithick was struggling in England for the adoption of high-pressure steam against determined opposition, headed by Watt himself. Nevertheless, his first steam-carriage, nicknamed "The Puffer," was operated in 1801, and was followed three years later by the first locomotive worthy of the name.

It were tedious to enumerate the various schemes designed to overcome the imperfections of Trevithick's invention. They were based mostly on the prevailing fallacy that smooth wheels could exert little or no tractive force on the rails. Toothed-wheels and rack-rails, endless chains, movable legs and feet, and other strange devices were designed to remedy the imagined difficulty. Although this curious error was refuted by Hedley's experiments in 1813, many years elapsed until the true conditions were fully recognized and generally accepted.

* "Notice of the Earliest Steam Engines Used in the United States," by Frederick Graff, "Journal of the Franklin Institute," 1853.

George Stephenson's first locomotive was built in 1814. The first passenger train, with Stephenson as engineer, was run on the Stockton and Darlington Railway on September 27, 1825. Then came the happy combination of the steam-blast with the multitubular boiler which, in October, 1829, enabled Stephenson's "Rocket" to distance all competitors in the famous trial on the Liverpool and Manchester Railway. The speed developed was about thirty miles an hour. Four years earlier, Nicholas Wood had written in his then authoritative treatise on the railway: "Nothing can do more harm to the adoption of railways than the promulgation of such nonsense as that we shall see locomotives traveling at the rate of twelve miles an hour."

Thus, following Watt's invention by over fifty years, the locomotive had at length attained to something like perfection. Accompanying the few successes the failures had been innumerable. Nothing in the history of invention is more pathetic and yet more inspiring than the life-stories of some of these heroic early workers. In the face of poverty and the derision of their fellows they struggled ever on. Their burning thoughts gave them no rest, and disappointment served only as a spur to greater effort. Negatively, each failure contributed something to the common fund of knowledge, and thus their labors were, after all, not wholly wasted. Luckless John Fitch epitomized the feelings of many of his class in his despairing utterance: "The day will come when some more powerful man will get fame and riches from my invention; but nobody will believe that poor John Fitch can do anything worthy of attention." He died by his own hand in 1798.

The experiments with steam locomotion in England soon attracted the attention of American engineers. Early in 1828, or nearly two years before the historic competition already mentioned, Horatio Allen had been sent to England to purchase three locomotives for the Delaware and Hudson Canal Company for trial between Honesdale, Pa., the head of navigation on the canal, and the coal-mines at Carbondale, a distance of about sixteen miles. The first of these, and indeed the first locomotive in America,—the "Stormbridge Lion,"—reached New York on May 17, 1829. Its first trial, a run of three miles and return, was made at Honesdale on August 9th of the same year, with Allen himself at the throttle. Allen was then twenty-seven years of

age. Shortly before his death, which occurred only eleven years ago, he wrote concerning that event that he had never run a locomotive or any other engine before or since that time. This locomotive proved much too heavy for the track and therefore did not come into service. The track consisted of a $3\frac{1}{4}$ in. $\times$ $\frac{1}{2}$ in. wrought-iron strap rail, spiked to 6 in. $\times$ 12 in. hemlock stringers, which were supported at intervals of 10 feet by wooden blocks.

The Baltimore and Ohio Railroad was chartered in 1827, and the corner-stone was laid on July 4, 1828. The first section of thirteen miles was opened on May 24, 1830, and it was here, on August 28 of the same year, that Peter Cooper ran, with his own hands, the first locomotive constructed in America. It was a crude, hastily improvised affair, weighing less than one ton, built under Cooper's direction, and called the "Tom Thumb." The boiler tubes were made of musket-barrels. The trial was merely an experiment to test the capability of a locomotive on sharp curves, which was amply demonstrated. But horses were continued as the sole motive power until shortly after the famous competition instituted by the company in 1831 for locomotives of strictly American manufacture. The "York," designed by Phineas Davis, carried off first honors and the prize of $4000. It had been stipulated that the weight of the locomotive, ready for service, should not exceed $3\frac{1}{2}$ tons, and that preference would be given, other things equal, to the engine of the lightest weight. The specified load was 15 tons, to be drawn at a speed of 15 miles an hour on a level stretch. The sharpest curve had a radius of only 400 feet.

The honor of having been the first railroad in the world designed from the start exclusively for locomotives and the first exceeding 100 miles in length belongs to the South Carolina Railroad, built from Charleston to Hamburg, opposite Augusta, a distance of 136 miles. Chartered in 1827, construction was not begun till two years afterward, under the direction of Horatio Allen as chief engineer. Allen advised in favor of the new motive power on the broad ground that he saw greater possibilities in the development of the iron horse than of its four-legged cousin. The first locomotive built in America for actual service, the "Best Friend," made its successful debut on this road early in 1831. It was designed by E. L. Miller, built by the West Point Foundry, but came to an untimely end through the explo-

sion of its boiler, the negro fireman having innocently fastened down the lever of the safety-valve.

The first passenger train in America deserving of that designation was hauled on the Mohawk and Hudson Railroad from Albany to Schenectady, on August 9, 1831, the second anniversary of Allen's trip. The engine was the famous "De Witt Clinton," built by the West Point Foundry; the distance, about sixteen miles.

In Pennsylvania a number of tramways to the coal-mines had been built at an earlier date, beginning with the gravity road at Mauch Chunk in 1827. But the Philadelphia and Columbia Railroad, begun in 1829 and completed in 1834, was the first in this State designed for general traffic. Together with the Pennsylvania Canal and the famous Portage Railroad it established a continuous line of communication between Philadelphia and Pittsburg. The Portage Railroad, one of the boldest engineering achievements of its day, should not be forgotten in this recital. It was located by Moncure Robinson, late honorary member of our Club, who was retained as Consulting Engineer during construction, from 1830 to 1835, with Sylvester Welch, Principal Engineer. The total length was 36 miles. The Allegheny Mountains were crossed by ten levels and ten inclined planes, operated by steam hoists. The ascent from Hollidaysburg to the summit was 1339 feet in 10 miles, and the descent to Johnstown 1171 feet in 26 miles. Its chief features, otherwise, were an 80-foot masonry arch spanning the Connemaugh, destroyed during the Johnstown flood, and a tunnel 901 feet long—the first railroad tunnel in America.* The old Portage road was abandoned in 1855, the year after the completion of the Pennsylvania Railroad from Philadelphia to Pittsburg.

The early English locomotives, imported in America, proved, for the most part, dismal failures. By reason of their weight and their rigidity they were adapted only to substantial road-beds, comparatively straight and level. In this country the cost of such construction was prohibitive. The Liverpool and Manchester Railway was built at an expenditure exceeding $100,000 per mile. The cost of the early railroads in

*The first tunnel in America was constructed in 1818-21, on the Schuylkill Navigation. Its length was 450 feet; width, 20 feet; height, from canal bottom, 18 feet. "Even the name of the engineer who located and built it is not known." Drinker's "Tunneling." Mr. Edwin F. Smith informs the writer that this tunnel was built by George Duncan, a Scotch engineer.

America, with some exceptions, was scarcely one-tenth that sum. The problem on this side of the Atlantic was to quickly open up a vast, sparsely settled country with the limited means at hand. Steep grades, sharp curves, and light uneven tracks were inevitable. Substantial iron rails were too expensive. Strap-iron, spiked to wooden longitudinals, supported on stone or timber, was the best substitute available. These iron straps, cut to miter-joints, soon wore loose and not infrequently curled up, and forced their way through the car-bottoms. They were called "snake-heads," and became in time a serious menace to the safety of the train and individual passengers.

Effective remedies became imperative, and native ingenuity was equal to the occasion. The double problem of distributing the weight of the locomotive on six instead of four wheels, and at the same time increasing its lateral flexibility, was solved by Jervis' swiveling truck as early as 1832. The equal distribution of the load upon the wheel base on an uneven track, and vertical flexibility in general, were effected through Harrison's invention of the equalizing lever in 1837. These features, since copied extensively in Europe, were for many years the distinguishing characteristics of American locomotive practice. Space forbids mention of the important improvements originated by James, Winans, Baldwin, Norris, and other American inventors.

As early as 1840 Norris, of Philadelphia, delivered in England the first four of eight locomotives ordered by the Birmingham and Gloucester Railway, to operate the three per cent. Lickey incline, two miles long—a feat which no English locomotive could accomplish. The first trial with the "Philadelphia" was so successful that it resulted in a second order for sixteen locomotives.

Mathias Baldwin built his first locomotive, "Old Ironsides," in 1832. During the year just past the Baldwin Works sent its output of 1200 locomotives, weighing not far from 100,000 tons, to all corners of the globe. The acceptance of "Old Ironsides" became a matter of serious concern because its contract weight of 5 tons had been exceeded by nearly one-half. Our locomotives have now attained an extreme weight, including tender, of nearly 200 tons.*

---

* The heaviest locomotive in the world to-day is one of the "Consolidation" type, belonging to the Pittsburg, Bessemer, and Lake Erie Railroad. Its weight, including tender, ready for service, is 195.7 tons.

During the five years from 1830 to 1835 the railway mileage in the United States had increased from 30 to 1098; at the close of the century it stands, in round numbers, at 190,000, exclusive of second tracks and sidings. In striking contrast with the gigantic consolidation of our day, it is interesting to recall that a half-century ago the line from Albany to Buffalo and Niagara was divided between a dozen different companies.

The general type of the modern American locomotive became well defined in 1836 with Campbell's eight-wheel engine with its two pairs of coupled drivers and swiveling truck. The changes since that time have been but so many steps in the general scheme of evolution to latter-day perfection. To pursue these further would go beyond the scope of this review.

At the beginning of the railway era in England it was seriously proposed by some extremists to fill up the canals and to convert them into railways. A few years later the reaction had set in. The Liverpool and Manchester Railway found that a freight charge of about six cents a ton-mile between its terminals barely covered the cost of service.* The annual repair charges on locomotives alone amounted to two per cent. of the total capital stock. Fairbairn (Henry) published a treatise in 1836 adducing figures in proof of the proposition that the new mode of locomotion was ten times as expensive as horses, and that it was folly to persist in its employment. Perhaps no brief statement could place the conditions then and now in stronger contrast.

With the application of steam to manufactures and transportation the field of engineering assumed a scope before undreamed of. New problems arose at every turn demanding some solution, however crude. Ingenuity and good judgment, aided by experimentation, accomplished much; but there were borders that could not be passed till science lent her powerful hand. Without detracting one whit from the glory of these earlier accomplishments—on the contrary, to the everlasting credit of their authors—may it be asserted that engineering had little scientific basis before the middle of the nineteenth century.

---

* As an extreme example of low freight-rates on American railroads at the present time, it may be stated that during the year ending June 30, 1900, the Chesapeake and Ohio Railroad carried coal profitably at the average rate of 2.02 mills per ton-mile.

Though Black had enunciated his doctrine of latent heat before Watt's time, the beginning of exact knowledge concerning the relation between heat and work dates from 1824, when Carnot founded the science of thermodynamics. Its sound development became possible only after Joule's experimental derivation, in 1843, of the mechanical equivalent of heat. This paved the way in turn for the profound researches of Clausius, Rankine, Lord Kelvin, and others, with their far-reaching consequences to steam-engineering practice.

The application of the laws of elasticity to simple beams was but vaguely recognized until Navier's studies appeared in 1824, and the problem was not completely solved till Saint-Venant supplied the missing links in 1853—nearly two centuries after the discovery of Hooke's classic law. The development of the theory of columns was, in a general way, concurrent with that of beams. The foundation was laid by Euler in the eighteenth century; a correct, though special formula was derived by Tredgold early in the nineteenth, but its value was not perceived until resurrected by Gordon a half-century later, and by him applied to the results of Hodgkinson's famous tests, and developed finally into its general form by Rankine. These results were not achieved, however, without the contributions of a long line of eminent elasticians. The process was one of gradual evolution, extending over several centuries.

The theory of stresses in framed structures presents a far more remarkable history in that it dates back only to 1847, when Squire Whipple, of Utica, N. Y., published the first correct analysis, as a part of two "essays" on bridge building. This work, covering 120 printed pages and 10 plates of illustrations, will ever remain one of the most noteworthy contributions to engineering literature. In the whole history of engineering there is perhaps no fact more curious than that up to about fifty years ago bridge building stood upon a purely empiric basis, not only in America, but throughout the world. The safety of a new design and its merit compared with other types could be determined only by the crude process of subjecting models to actual tests. The attainment of a correct and economic distribution of the material throughout all parts was obviously impossible. The security of these earlier structures lay largely in the fact that they were mostly of a composite type, so that the weakness of a single member did not necessarily destroy the integrity of the whole fabric. Not-

withstanding this lack of exact knowledge concerning the special functions of each component part, the building of wooden bridges was developed to a high degree of excellence, and notably in America by Palmer, Burr, Wernwag, Town, and Long, whose work has survived, in part, to this day. Wernwag's "Colossus" bridge, built across the Schuylkill at Fairmount, Philadelphia, in 1812, and destroyed by fire in 1838, had the remarkable span of 340 feet $3\frac{3}{4}$ inches.

The later products of American bridge building—beginning with the works of Howe, Whipple, and Pratt, and closing with achievements which need not here be specified—may challenge comparison with the world for their intrinsic excellence. At the same time it is only too apparent that little more than a beginning has as yet been made in this country in the development of what may be called "bridge architecture": the art which finds expression chiefly in the effective design and embellishment of piers and approaches, in harmony with the structure as a whole—its purpose and its environment. This admission may be made the more unreservedly since hopeful evidences are not wanting that a turning-point has come, and that in future the immediate utilitarian ends will be less narrowly kept in view. Again, it should in justice be acknowledged that America's contribution to the development of the theory of stresses has been relatively insignificant.

No review, however cursory, of nineteenth-century engineering can be made without recognition of the tremendous debt it owes to metallurgy. The obligation is indeed a mutual one, for marked progress could not have been achieved in either practice save through the stimulating impulse of the other. To appreciate in some slight measure the advance of iron metallurgy within modern times, let it be remembered that the first cast-iron bridge in Europe was not built till 1776,* and the first in America probably not before 1840.† The manufacture of cast-iron on a larger economic scale became possible

---

*This bridge, spanning the River Severn in England, at Coalbrookdale, was designed and built by Abraham Darby. It is a circular arch with a span of 102 feet and a rise of 45 feet. It was built in 1776–79 and is still in service.—Mehrten's "A Hundred Years of German Bridge Building," Berlin, 1900.

†See letter of Squire Whipple, "Railroad Gazette," April 19, 1889.

Bridge over the Severn at Coalbrookdale, England, Built in 1779.
The First Iron Bridge in the World.

only after Neilson's invention of the hot blast in 1828. The superior merit of wrought-iron for constructive purposes did not become fairly established till toward the middle of the century. This metal had hardly gained its ascendancy before a new and mightier competitor arose which now commands the field. Thus metallurgy has created three great epochs in constructive engineering, virtually within the span of a single century.

The indebtedness of modern engineering to the so-called abstract sciences is so obviously universal that no specific evidence need be adduced. Indeed, in a broad sense, it may be said that every step in its development and every detail in its practice represent, directly or indirectly, the useful exploitation of some principle or discovery of science. Nor should it be forgotten that the most far-reaching practical results have not infrequently had their source in scientific observations which, even to the most acute, seemed at the time to hold little or no promise of future usefulness.

The rise of engineering to a truly professional plane may be gaged perhaps more accurately by its schools, its literature, and its organizations than even by its works. A few historical notes along these lines may, therefore, be of interest.

Excepting West Point, the Rensselaer Polytechnic Institute, Troy, N. Y., is the oldest engineering school in any English-speaking country. As the Rensselaer School, it was founded in 1824 by the Honorable Stephen Van Rensselaer with a view of giving instruction, to quote his own words, "in the application of science to the common purposes of life." The small interest in science at that early period is well shown by the fact that at about that time the University of Pennsylvania abolished its department of natural science, after a languishing existence of eight years, on the ground that the establishment of the Franklin Institute (1824) rendered "such a department in the University 'unnecessary.'"* The first class in civil engineering was graduated at the Rensselaer Institute, as it was then called, in 1835. Until the reorganization of the school under its present name, in 1849, and the consequent expansion of its course to three years, a single year sufficed for obtaining the

* "Historical Sketch of the University of Pennsylvania," John L. Stewart, U. S. Bureau of Education, Circular No. 2, 1892.

degree of Civil Engineer; in fact, it was announced that college graduates might succeed in earning it in *twenty-four weeks.**

At the close of the Civil War there were only six institutions in the United States engaged in teaching engineering, exclusive of West Point, with a joint total of scarcely three hundred graduates from their beginning.† Since then, the number of schools of all grades in which engineering courses are offered has been swelled to a total of upward of a hundred, and the number of graduates for a single year exceeds fifteen hundred.

Turning now to the engineering societies, the first attempt in America to form an organization of engineers was made in 1839, but proved a failure. The impulse originated in Augusta, Ga.; a convention was held in Baltimore; a committee was appointed to arrange the preliminaries for a national organization; this committee met at the Franklin Institute in Philadelphia; it prepared the draft of a proposed constitution which was never adopted; and with this the movement came to an untimely end.‡

To the Boston Society of Civil Engineers, instituted on July 3, 1848, belongs the credit of being the first organization of the kind in the United States. Despite a very small membership, its affairs were fairly prosperous till 1855. After that the attendance at meetings fell to such an ebb that a quorum was seldom present.§ Before the resurrection of the Society, in 1874, no meetings had been held for a period of thirteen years.

Second, in chronological order, and not least in point of interest, is a private engineering society which held weekly meetings in Brooklyn as early as 1851. Its euphonious appellation, the "Wa-ca-ma-ha-ga," was coined from the initial letters of its six founders' names. Over this curious signature so-called "Indianeering" notes were for a time contributed to a technical journal edited by one of their number. The members of this Club were particularly active in the subsequent organization of the American Society of Civil Engineers, and later in its

---

* "History of the Rensselaer Polytechnic Institute," Palmer C. Ricketts.

† "Engineering News," August 4, 1892.

‡ "Historical Sketch of the American Society of Civil Engineers," C. W. Hunt.

§ "Historical Address by Desmond Fitzgerald," "Journal of the Association of Engineering Societies," vol. XXI.

reorganization. Among its fourteen members, no less than five became presidents of the national society and several, vice-presidents and other officers.*

The American Society of Civil Engineers was founded in 1852. Although organized as a national society from the start, it led at first a most precarious existence, in singular contrast to its present state. Thus the average attendance at meetings was *six* for the first year and *less* for the second. From 1855 there came a twelve-year period of "suspended animation," during which no meetings took place. The useful life of the Society dates practically from its reorganization on October 2, 1867. Its first publication did not appear till five years later. The Boston Society began to print its papers in September, 1879, or about six months after the first appearance of our own Proceedings.

There are at present sixty to seventy or more flourishing societies in the United States devoted to the promotion of engineering, or closely cognate interests, by holding regular meetings and publishing their proceedings. Among these, scarcely ten have been in existence over twenty years.

To American engineering journalism perhaps no higher or better-merited tribute can be paid than that it has kept squarely abreast, and often in the van, of this quick tide of progress, feebly evidenced by the records already cited. A new form of engineering literature has lately arisen, engaged in a praiseworthy and most successful effort of presenting engineering topics in a form suitable to the understanding of the intelligent layman, without detracting from their essential dignity and worth.

The quickening of popular interest in our profession has found expression in more substantial form by the erection of new technical schools or the development of existing ones, through private beneficence or public aid, on a scale undreamed of by a preceding generation. To us, as most immediate beneficiaries of this bounty, it comes as but a single token of added individual responsibility, which we should strive to justify by every power that lies within us. Let us contribute, to the measure of our talents and our opportunity, to the advancement of that honorable profession in which we hold common

---

* "Engineering News," Sept. 10, 1887.

interest and common trust. Let past achievements serve as inspirations; but let the thought be uppermost that future works are to be measured by ever higher standards, which we ourselves must set.

AMERICAN ISTHMIAN CANALS.

A Topical Discussion, November 3, 1900.

THE TOPOGRAPHY AND HYDROGRAPHY OF THE ISTHMIAN REGION.

JAMES CHRISTIE.

LAST spring I had the pleasure of presenting informally to the Club a historical sketch of the various projects that have been proposed for a ship-canal across the American isthmus. The present discussion will be limited to the technical and descriptive features of the subject. I shall leave many details for others to discuss, confining my own remarks to the general aspects.

Let us first examine the map of Central America, and consider the topography and hydrography of the long strip of land connecting the continents. Embraced within a distance of 1500 or 1600 miles, between the gulfs of Campeachy and Darien, are situated all the routes that have ever been proposed for locating a connecting ship-canal. Starting at the most northerly, we can enumerate them as follows: Tehuantepec, Nicaragua, Panama, San Blas, San Miguel, and, most southerly of all, Atrato. At the points enumerated exist either depressions of the Cordilleras or else least distances between oceans, which seem to present so many comparative advantages for each particular scheme, as rendered it seemingly attractive to the advocates of that route. This whole length of land bears nearly normal to the trend of the northeast trade-winds, and is wholly within their influence for a large part of the year. When the sun is in its southerly course, the northeast trades blow constantly on this coast and traverse it, reaching well beyond into the Pacific. In our spring and summer, when the sun is northerly, the equatorial calms and rains are drawn over Central America, and the well-known rainy season occurs. This movement begins earlier and lasts longer at the lower end of the isthmus, where the rainfalls are usually heavier and the calms or baffling winds continue longer and are more persistent.

In addition to the ordinary phenomena of the trade-wind movement, monsoons occur, according to Maury's charts, especially in Panama Bay. This alternation is probably due to the southwest trades, driven northward by local influences and taking a northerly or northeasterly course, as seems to be usual with monsoons. Maury's charts show the equatorial calms as being deflected northward out of their usual parallel at the upper Pacific coast of South America. If this is correct, it then follows that the calms or baffling winds of the equatorial doldrums would begin earlier, be more persistent, and last

MAP OF PROPOSED LINE OF NICARAGUA CANAL.

much longer on the lower than on the upper coast of Central America. This subject is only mentioned here because it has in the past created, and does still create, considerable discussion between the advocates and opponents of the southerly routes, especially the Colon-Panama route.

It seems to be a fact that sometimes long periods of calms occur in Panama Bay, and it is on record that sailing vessels have at times been detained for several months, but, according to some navigators, the detention is only occasional and is not serious. Possibly both contentions are correct to some extent. It will be remembered that

the monsoons of the upper Pacific coast of South America are not true monsoons, similar to those of the Indian Ocean: the forces that create them are not of so positive and permanent a character as the latter; even these sometimes fail, whereas the monsoons in question may frequently not have a protracted recurrence or, if so, only in a very mild way.

Throughout the whole district of Central America the mountain range or Cordilleras lie, as a rule, toward the southern or Pacific coast. The rainfall, which is very great in the wet season, is much heavier—approximately double—on the northern slopes than on the Pacific slope, consequently the largest and most important rivers flow

toward the Atlantic coast. The average rainfall is also heavier at the lower end of the isthmus than at the upper or northern end of Central America. The tides are much greater on the Pacific side than on the Atlantic; on the latter coast they are quite insignificant, whereas the tides at Nicaragua on the Pacific frequently have a movement of from eight to fifteen feet. At Panama Bay the tides run higher; the ordinary tide is twelve feet, and full spring tides over twenty feet; occasionally extreme tides are recorded much higher than this.

In the dry season, when the sun is toward the southern tropic, the rainfall is insignificant; the rivers dwindle, and at no point, excepting in Nicaragua, does a natural storage of water exist capable of supplying the locks for an active traffic. Therefore, at all the routes where locks are required, excepting Nicaragua, it will be necessary to create artificial reservoirs for the storage of water. On the other hand, in the rainy season, these gentle streams become raging torrents, and one of the most serious problems has been how to control or dispose of the enormous rush of water that annually occurs and occasionally comes in overwhelming quantities.

Before reviewing the present studies of the Nicaragua and Panama schemes, it is well to bear in mind that if a deep waterway should be created between the lakes and the Mississippi, as would appear to be quite probable, and when navigation between the lakes and the Gulf of Mexico is so controlled and improved as to become an important route for ocean-going vessels, it is quite probable that then the subject of the canal *via* the Coatzocolcos River and Tehuantepec would become a project of great importance. A glance at the map, tracing the connection between the mouth of the Mississippi and the Pacific ports of the United States, will demonstrate this.

Passing down to Nicaragua, the existence of the lake at the moderate elevation of 110 feet above sea-level has always served to render this an attractive situation for a canal. The project has been entertained for hundreds of years, dating back to the earliest Spanish settlements, although it has been more actively and persistently urged since the close of our Civil War, and more especially by the naval officers who have examined and surveyed the route; this, notwithstanding that it presents the longest distance between oceans of any of the various routes, being 168 miles from Greytown to the port of

Brito on the Pacific, and also notwithstanding that no natural harbors exist at either end, but have to be created and maintained.

Passing over the various methods which have been proposed in the past for constructing this canal, some of which involved damming the San Juan River at several points, we may briefly review the proposition of the last company who had undertaken the work, and, failing to receive the anticipated national support, were compelled to abandon it. Their plan was to dam up the San Juan River a little below the confluence of the San Carlos, bringing the level of the San Juan River up to that of Lake Nicaragua, and possibly also raising the level of the latter a few feet. At the Atlantic end the canal was to leave the river above this dam, following an artificial excavation, and a series of three locks, respectively of 45, 31, and 30 feet lift, were to be constructed to raise or lower vessels between the respective levels of the ocean and the lake. On the Pacific side an artificial cut was to be made from the lake to Brito, with a spillway and three locks near the cost, corresponding to those on the Atlantic side.

The principal excavation would be at two points: One cutting through a range of hills between the dam and Greytown, involving the removal of about 7,000,000 cubic yards of rock; the other, a similar work between the lake and the Pacific, of 6,000,000 yards.

The amount of excavation involved by this route does not present any serious difficulty or expense, the principal difficulties arising from the San Juan dam and from the embankments that would have to be created where the natural depressions occur, and from the difficulty of securing suitable foundations for the locks. These difficulties are so great and are viewed so differently by engineers that the last commission which reported on the subject nearly doubled the estimate of cost above that reported by their predecessors.

The existing Walker Commission, which has made a long and careful examination, will shortly report on the subject. We can not anticipate its opinions, but it has been asserted in the press that, failing to find a proper foundation within a hundred feet of the existing river level, it may propose the location of the dam elsewhere. The accompanying profile indicates the work proposed by the last canal company.

The advantages and disadvantages of the Nicaragua route would seem to be as follows. Advantages: northerly course, involving the

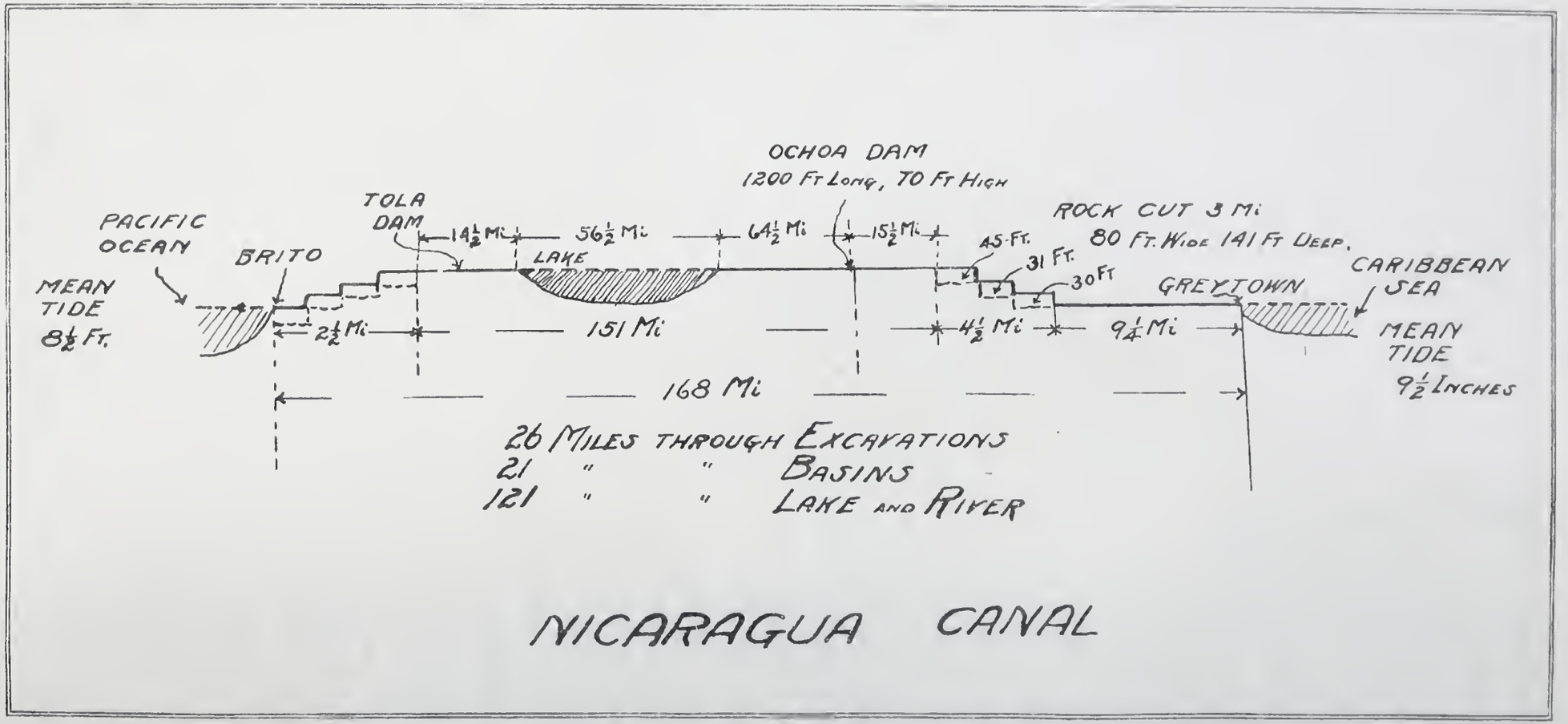

NICARAGUA CANAL

shortest route on the Pacific side for northerly bound traffic. The existence of a lake as a source of supply for the locks proposed, and also as presenting a large navigable body of water over which steamers could travel at ordinary speed. The internal trade of Nicaragua, may develop into one of considerable magnitude. The lake might also be used as a rendezvous for war-vessels, offering a fresh-water basin and a salubrious climate.

The disadvantages are the absence of natural harbors and the possible expense in maintaining them when artificially constructed. The long route to be traversed, which, at the rate of four miles an hour and the delays in lockage, might require over two days to make the passage. The difficulty in securing a desirable location for the construction of a safe and permanent dam and also for locks, and the possibility of these being injured by earthquake disturbances. The problem of protection from the ravages of the San Carlos River, which at time of floods carries quantities of silt and might load the canal with detritus, unless this river is provided with an artificial outlet to discharge its waters below the dam, or unless a suitable site for the dam can be found above the outlet of this river; also the curving track vessels would have to follow, owing to the tortuous course of the river between the dam and the lake.

It will be remembered that any projects to be considered for a ship-canal at this time must consider the passage of vessels in a depth of water little less than 30 feet, and locks little, if any, shorter than 700 feet.

Passing down to Panama Bay and considering the Colon-Panama route, it is unnecessary for us to dwell long on the plan proposed by the De Lesseps Company for a sea-level canal at this point. Here the distance between oceans is only 43 miles, or, considering the excavation required in the bay on the Pacific side, the total length of canal would be about 46 miles.

Some twenty years ago the late M. De Lesseps, bearing the prestige and honor bestowed upon him for the successful work completed at Suez, essayed to add to his renown by accomplishing a similar work at the American isthmus. He summoned a commission of eminent engineers to assemble at Paris, where the subject was lengthily investigated and discussed. Throughout the whole proceedings the individuality of De Lesseps evidently dominated and controlled the final

judgment. It was there decided that the canal, if constructed, must be at sea-level, without locks, and that it must be an open cut—that is, not to pass through a tunnel. Manifestly the only point in the isthmus where this could be effected without enormous cost was at Panama, where the summit of the Cordilleras is only about 300 feet above sea-level, whereas further down, at San Blas or San Miguel, the elevation of 1200 or 1500 feet for several miles would almost necessarily imply the use of a tunnel. De Lesseps, with a commission of eminent engineers, visited the isthmus, and with the enthusiastic sanguine nature of the man, declared that the work contemplated was easier to execute than that of Suez. He decided to start from Colon (Aspinwall), in the Bay of Limon, and cut across a few miles into the valley of the Chagres River, as this river discharges into the sea several miles north of the Bay of Limon. The canal here displaces the river from its bed, which was to be deepened, and the canal was to follow this valley to a point where it swerves to the south, where a gigantic dam was to be constructed for controlling the flood-waters of the river, which would then be diverted by another channel to the ocean. Thence the canal would pass through the dividing ridge at Culebra, requiring a cut over 300 feet deep, opening thence into the valley of the Rio Grande, and following that to the Panama, using a tide lock for controlling the flood of the tide on the Pacific side. Indicative of the magnitude of this undertaking, which involved the changing of rivers from their natural beds, was the magnitude of the storage dam, designed to be constructed in the Chagres Valley above Matachin. This dam was to be a mile long at its crest, to be about 130 feet high, and was designed to store about 1,000,000,000 cubic meters of water, and was estimated to cost about twenty millions of dollars. The whole cost of the canal was estimated at about one hundred and seventy millions of dollars.

Shortly after the beginning of the work De Lesseps, who was then a very old man, apparently passed into senility, and the work fell into the hands of schemers and speculators, who inaugurated a system of peculation and fraud, revelations of which almost caused a revolution in France. A sum much exceeding the estimated cost of the completed canal was spent with comparatively little result. The matter was taken into the French courts, and passed into the hands of a new corporation, known as the New Panama Canal Company.

Panama Canal.

Plan of Technical Commission.

1898

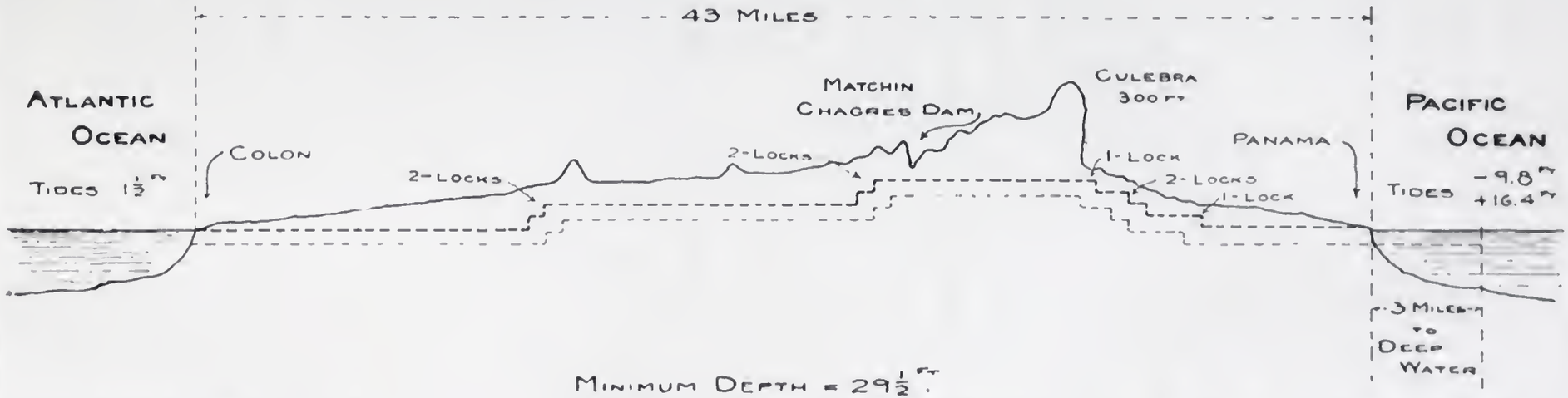

Twin Locks 738 ft Long.
59 and 82 ft Wide
Pivoted Single Gates

Minimum Depth = 29½ ft.
Elevation of Summit Water Level above Mean Sea Level } = 97½ ft Allowing a Variation in Level of 5 ft
Bottom of Upper Level of Canal 68 ft above Mean Sea Level

This corporation evidently proceeded with considerable care and deliberation. A commission of engineers of several nationalities, and of established reputation, was created, with instructions to make a new study of the problem. This commission, after many sessions during a year's time, recommended the abandonment of the sea-level canal, and instead thereof proposed to put in a system of locks, either for one or for two upper levels. The difference in the estimated cost of the one or two upper level schemes appeared to be little, as compared to the whole cost of the canal; the object of the third level apparently being more to save time than expense, as there was danger of the time-limit for the concession expiring, and it had already been extended by the Republic of Colombia. The French company has prosecuted the work with considerable vigor, and this year has had a large force of men employed on the isthmus, and urgently requests the United States Government to consider the work that has been, and is being, done there, before undertaking a canal elsewhere. A general outline of the plan now being followed is shown on the accompanying profile, the proposition being to build a dam and a storage reservoir on the Chagres Valley, several miles above its intersection with the summit level of the canal. From this dam a feeder will be provided for supplying water to the summit level, and a lateral channel provided for the outflow of superfluous water in the rainy season. At the second level on the Atlantic side a lake will be created, the extended area of which will provide for flood water and tend to preserve uniformity of level of the canal. The French engineers estimate that at the present time nearly one-half of the total work required is completed, and that a further expenditure of less than one hundred million dollars is required to complete the canal.

The Walker Commission has carefully examined this work. Its report will shortly be made public, and is looked for with considerable interest. The duty of the Commission is to recommend to the national government the most desirable location for a canal. It is to be hoped that Congress will be guided by the report and not by any preconceived ideas in favor of any particular plan or route, and will take proper steps to provide a canal, according to the recommendation of the Commission.

The advantages of the Panama route would seem to be, first, the short length of land-locked water route. Its distance from New York

via the Windward passage differs little from that of Nicaragua. Of course, the run northward on the Pacific side would be greater by several hundred miles than by the Nicaragua route. There are better natural harbors at Panama than at Nicaragua. The vertical height to be locked, according to the recent Panama plan, is nearly the same in both cases. An objection to Panama is found from the prevalence of calms or baffling breezes at certain seasons of the year in the Bay of Panama, as previously described. This, of course, would only affect sailing vessels. Another objection which arises, largely political, is that the United States Government is invited to purchase stock or become a shareholder with the French company in this canal, as the company, under the concession, can not transfer its rights.

There are still many zealous advocates of the San Blas and the San Miguel routes, these being the shortest in distance between the oceans, and both possible without traversing the channel of important rivers, but both unfortunately involve a passage through the Cordilleras where the mountains attain a considerable elevation. A sea-level canal at either of these locations would possess the great advantage that it could be widened from time to time as the traffic justified the expense.

If a water channel 300 or 400 feet wide could eventually be provided, a speed of ten miles an hour could be maintained during the passage, enabling steamers to pass through in a few hours. In such an event a tide lock would probably be unnecessary. Considering the rapid growth of the traffic at Suez, which, after an existence of thirty years, has now an annual traffic of 10,000,000 tons, with a revenue of eighteen million dollars, it requires no flight of imagination to foresee these quantities being exceeded at a canal through the American isthmus before the middle of the coming century; therefore a commodious canal in the most convenient location should be the first consideration, and let cost be subservient thereto.

Late events demonstrate more clearly than ever, both from a political and a commercial point of view, the urgent need of opening the canal, and the nation must be prepared to spend several hundred millions of dollars, if needed, to obtain the best that is practicable.

THE ENGINEERING FEATURES OF THE NICARAGUA ROUTE.

EDWIN F. SMITH.

A WRITER on the subject of an Isthmian canal, some thirty years ago, said : " We have spoken of the piercement of the American isthmus as an *international* work. It should rather be the work of American energy, American talent, and American money. It is part of the American continent. No foreign nation can have the same military control of it that Great Britain now has of the Suez Canal. . . . . The benefit of its construction, although shared by the maritime powers, will be most important to the Americas; and, by reason of resources, organization, and position, especially to the United States."

These reasons are as strong to-day as they were when urged thirty years ago, in support of the control by the United States of a canal connecting the Atlantic and the Pacific. Much time has been spent in the intervening years in examinations in the field, and in investigations to determine the best possible route; and right here it may be said, in explanation of the seemingly slow progress made, that the location of a ship canal across the Isthmus on a line combining safety and permanence of the works with economy in first cost and in future maintenance offers problems in engineering that are far more difficult of solution than were those presented in the location and construction of any of the transcontinental railway lines, great and enduring as they are as monuments of engineering skill.

With the exception of the Panama route, no Isthmian project has received such careful examination as the lines passing through Lake Nicaragua. It is the shortest practicable route yet found between the Atlantic and the Pacific seaports of the United States. Therefore it is *the best route*, provided the works can be made permanent, and safe against torrential rains, floods, and seismic disturbances.

The modern cargo-carrier of to-day, especially on the Atlantic, is a costly ship compared to what it was in the days when an isthmian canal was first agitated. In the passenger service the limit has apparently not been reached in steamers of 750 feet length, 76 feet beam, and 30 feet draft. These dimensions have not as yet been equaled by freighters, nor is it to be expected that they will be in the near future;

nevertheless, they are so large and costly that the necessity already exists of keeping them constantly employed. Their sailing route from port to port must be shortened as much as possible, and the time of discharging and taking on cargo in port must be reduced to the minimum.

Manifestly, such costly vessels as our modern Atlantic freighters can not profitably be employed in competition with the transcontinental railways on the exceedingly long route around Cape Horn or through the Straits of Magellan. For the best development of the commerce not only of the United States, but of the whole world, a shorter route is needed between the Atlantic and the Pacific, and all the indications seem to point to the Nicaragua Canal as being the one most in favor.

The following table will illustrate the great saving in distance which would be effected were the Nicaragua Canal built and in use—a saving which would have an immense influence upon commerce between the Pacific coast and the East and the markets of Europe:

From San Francisco to	Via Cape Horn.	Via Nicaragua Canal.	Distance Saved.
New York, ...	14,840	4760	10,080
Liverpool, ...	14,690	7508	7,182

I have time to refer only thus briefly to the saving in distance via Nicaragua, leaving to others the comparison of isthmian routes, and their effect upon American and European competition in the markets of the far East and of South America, and will confine myself to a few brief remarks upon the feasibility of the Nicaragua Canal, and some of its engineering features.

The feasibility of the project, as far as is now known from the published reports of surveys, depends on the control of the lake level, the dam in the San Juan River, the maintenance of the divide cut, and the embankments on the eastern division.

Lake Nicaragua.—From the report of the Nicaragua Canal Commission, 1897–1899, we learn that: "It is an interesting and peculiar feature of the route that in early geologic time the lake was evidently an arm or bay of the Pacific Ocean, while the Continental Divide

traversed the isthmus to the eastward in the vicinity of Castillo Viejo, and the Rio San Juan, as an outlet of the lake, had no existence. This is attested by the remains of an old river channel, of large dimensions, which crossed the Western Divide and formed the outlet of the lake after it became separated from the ocean, and by other geologic features."

Some of the physical data which are of the most importance in the consideration of problems of water-supply, lake regulation, storage, and operation we learn from the report of the Commission are as follows:

Area of water surface of Lake Nicaragua, ...	3,000 square miles.
Area of entire drainage basin (approximate), . . .	12,900 square miles.
Maximum dimensions of Lake Nicaragua, ...	101 x 45 miles.
Elevation of Lake Nicaragua above sea-level, . .	98 to 111 feet.
Mean elevation above mean sea-level, ...	104.5 feet.
Length of San Juan River, ...	121.7 miles.
Maximum annual rainfall (Rivas in 1897), ...	123.43 inches.
Minimum annual rainfall (Rivas in 1890), ...	31.81 inches.

The general features of the Nicaragua Canal embrace, as stated by the Commission:

First.—The division between the Pacific and the lake—called the western division.

Second.—The lake itself.

Third.—The division between the lake and the Caribbean Sea—called the eastern division.

It would be both unfair and premature to enter upon a critical review of the work of the Nicaragua Canal Commission, which is still engaged in the solution of the vast problem of an economic and safe route.

Those who are at all familiar with the Childs and Menocal surveys and plans can, however, see at a glance that important changes have been made by the Canal Commission, 1897–99, and these for the betterment of the route and the safety of the projected works.

I will endeavor to go over the subject briefly, noting the changes which have been made:

Dimensions of Canal.—The prism of the artificial water-way, or the canal, has been considerably enlarged over that of any previous project. This is a move in the right direction. Indeed, I have no

hesitation in saying that had the canal been built on the lines laid down by Childs and Menocal, it would be useless to-day for any but vessels of moderate dimensions.

It is now proposed by the Commission that the canal shall nowhere be less than 30 feet in depth. The width to vary with local conditions as follows:

From Greytown harbor to Boca San Carlos, the bottom width to be 150 feet, with slopes in earth 1 : 1 and in alluvial silt 1 : 2. In hard rock, vertical sides up to 40 feet from the bottom; then slopes of 5 : 1. In soft rock the slopes to be 2 : 1.

In the river the width at bottom to be 300 feet with slopes of 1 : 2.

The bottom width of the canal from the lake to the Pacific to be 150 feet, with slopes as on the eastern division.

The calculations for lake level are based upon a minimum elevation of 104 feet above mean sea-level, Caribbean Sea as a datum.

The locks are 80 × 30 × 665 feet between quoins, giving an available length for vessels of 620 feet.

Compared with the former projects the percentages of increase in the areas of the several cross-sections are as follows:

Canal proper,	9.1 per cent.
Through rock cut,	50.0 per cent.
In the river (in rock),	131.0 per cent.
In the river (in earth),	84.0 per cent.

These are all substantial increases in cross-section, and are absolutely necessary in view of the present dimensions of passenger and freight steamers, as well as naval vessels.

Regulation of the Lake Level.—It has always been admitted that the regulation of the lake level was a matter of vital importance to a canal by the Nicaragua route. Its surface has been known to fall as low as the level of 98 feet above mean sea-level, and to rise as high as 111 feet above the same datum, occurring at remote intervals, but nevertheless a standing menace to an uninterrupted navigation unless dealt with by the erection of proper controlling works for the regulation of the San Juan River, the natural outlet to the sea.

The effort in the solution of the problem should be to keep the level up to the highest practicable without incurring too great damages from the destruction of private property.

The Commission has wisely, I think, reached the conclusion that the lake may vary its level from elevation 104, the minimum, to 110, the maximum; and that spillway capacity of 50,000 cubic feet per second should be provided for regulation, and so arranged as to discharge 15,000 cubic feet per second into the Rio Grande River on the west side, and the remainder through the San Juan River on the east side.

The Western Division.—One of the weak spots of the Menocal project was the La Flor dam, which was designed to create an extension of the lake westward to within 4 miles of the Pacific Ocean, creating a basin 6.25 square miles in area, through which navigation by deep-draft steamers would certainly be easier than through a canal. The scheme, however tempting, was an unsafe one. It involved a high dam at La Flor, to hold the level of the lake at 110 feet above sea-level. Its crest would have to be about 110 feet above sea-level, while the solid rock is found at about 45 feet below sea-level, making a structure 165 feet high. Such a dam is, to say the least, utterly unsafe in a country liable to seismic disturbances, and it is therefore reassuring to those who are in sympathy with the Nicaragua Canal project to know that the Commission has abandoned it and adopted a route following the left bank or east side of the Rio Grande River, which plan, to use the words of the report, "presents no special engineering difficulties, enables good sites for locks to be selected (a most important consideration), and preserves for cultivation the fertile land bordering immediately on its banks."

The Lake Division.—The lake division will be apparently the same for any project.

The Eastern Division.—The weakness of the former projects for the eastern division centered in the Ochoa dam, the controlling works for the lake and the San Carlos River, and the San Francisco embankment line. The number of dams, large and small, was 67, and the total length of embankment line was about $15\frac{1}{2}$ miles, at some places over 100 feet high, with treacherous foundations.

These difficult constructions contained an element of uncertainty which might eventually have led to the Nicaragua route being considered by vessel-owners an unsafe one, and the Commission has wisely entered into an exhaustive and careful survey of the entire east side between a point above the mouth of the San Carlos River and the sea.

The permanency of the canal depends more on the proper solution of the problem of location of this part of the line than on anything else, and until the Commission has finished its surveys and made its final recommendations, little can be known as to a definite location. It is an extremely difficult problem, and one requiring time, both for the field and office work.

As I have said before, it is much easier to locate a line of railway than a canal; there are fewer problems to be considered, fewer side issues to intervene and spoil what would otherwise be a safe location.

It is reassuring to know that the Commission has progressed so far as to abandon the Ochoa dam and select a site above the San Carlos, where *good solid rock foundation* can be obtained, for a dam of a maximum height of about 138 feet from its foundation, thus reducing the cost and difficulties of construction.

The change also in the number of locks on the eastern division is one which I am sure will be to the advantage of the canal if constructed. The new plans of the Commission contemplate six locks on the eastern division, of 18.4 feet lift each, instead of three, as formerly proposed. This will certainly add to the stability and permanence of the works.

The latest estimates of the cost of construction of the entire line of the Nicaragua Canal amount to about $118,000,000, based upon liberal prices, and an ample allowance for engineering and administration during construction. The Commission, in its report, refers to the fact, which is an important one, that "the surveys have in general revealed better physical conditions than were hitherto supposed to exist, especially as to the amount of rock in the upper river, whereby it is possible greatly to reduce the estimated cost of construction." Nevertheless there are always unforseen difficulties and hindrances, as every engineer knows, so that it would not appear improbable that the estimated cost might reach $135,000,000 (nearly), as stated by Colonel Peter C. Hains, in his minority report.

Even at the latter figure, in view of the high position which the United States will inevitably take among the maritime powers of the world, and the wonderful development which must take place in its commerce within the next quarter of a century, will it not be profitable to build, own, and maintain the Nicaragua Canal?

[NOTE.—Since the foregoing was written the preliminary report of

the Isthmian Canal Commission has been made to Congress, and unanimously recommends the adoption of the Nicaragua route upon broader lines and at a largely increased cost over the estimates of previous commissions. The report recommends a canal with a minimum depth of 35 feet throughout, a bottom width of 150 feet, and with locks 740 feet long by 84 feet wide. The estimated cost is approximately $200,000,000.

As intimated previously, it would appear to be unwise for the United States Government to invest its money in a canal of any smaller dimensions, in view of the growing tendency to enlarge the size of ocean-going steamers.]

THE PANAMA ROUTE.

LOUIS Y. SCHERMERHORN.

I DID not anticipate taking part in the discussion, but, since time permits, there are a few points to which reference should be made. We have become so accustomed to think of but two routes—the Nicaragua and the Panama—that it seems almost a foregone conclusion that the canal to be built will be on one of these two routes. This is not a proposition which it is safe to accept as true, for we do not know what the present Commission will report; and it is not certain that they will report in favor of either of these routes. Their duties require the Commission "to determine the most feasible and practicable route across the Isthmus for a canal," regardless of all previous action in this matter.

There are grave considerations which would arise in lock, dam, and heavy embankment constructions on the Nicaragua route, from the fact that the locality may be seriously disturbed by earthquakes. Reference to the Century Atlas indicates that within a distance of 200 miles, north and south of Lake Nicaragua, there are fourteen volcanoes which have been in active operation during the last hundred years; that several of these now form islands in Lake Nicaragua; and that the Pacific terminus of the canal is among a host of extinct craters. This is a fact that may well cause great apprehen-

sion as to the ultimate safety of the proposed canal constructions at Nicaragua. The Panama route shows no such evidences of past volcanic action.

In comparing the merits of the two routes it should not be forgotten that the Nicaragua route is practically 150 miles long, while the Panama route is less than 50 miles long. The increased risks of passing large steamers through a route three times longer than another will not fail to receive consideration.

The Nicaragua route would probably cost $150,000,000, if built upon plans which would be adopted at this time; and from the recent statements of the American Commission, recently made before the Senate Committee, it is fair to infer that the Panama Canal can be built as cheaply as the Nicaragua Canal; in fact, some of the members of the Commission intimate that it might be built for less. The present International Commission of Engineers for the Panama Canal submits three estimates, based on different elevations of the summit level, which vary between $94,000,000 and $102,000,000. The first of these plans places the elevation of the bottom of the cut through the summit level at 97 feet above sea-level, with an estimated cost of $94,000,000; the second plan places this cut at 68 feet, with a cost of $98,000,000; while the third plan reduces the elevation of the bottom of the summit level to 33 feet above sea-level, with an estimated cost of $102,000,000. This extreme difference of about $8,000,000 between the cost of the several plans is probably less than one-half the allowance for contingencies in any of the estimates. Even if 50 per cent. is added to these estimates they will not then materially exceed the estimates of the Nicaragua route.

The regulation of the Chagras River and its floods is the great problem of the Panama route; and it is a matter of surprise that the engineers employed upon the De Lesseps project should have so dangerously underestimated this part of the problem. The conclusions of the present International Commission indicate that the flood volume of the Chagras River, during forty-eight hours of its maximum discharge, is about 92,000 cubic feet per second; or approximately one-half the average discharge over Niagara Falls. The estimate of the De Lesseps engineers placed this maximum at about one-fourth of the true amount. The conclusions of the present Commission are based upon rainfall observations of fifty years.

The statement is made that there has been an observed range of 70 feet in the narrow gorges of the river. The flood of 1870 is referred to as the maximum observed, and I understand that the discharge of 92,000 cubic feet per second refers to that flood.

Under the plans proposed by the International Commission the regulation of the Chagras River is to be accomplished by impounding the flood discharge behind two great dams, by which it is proposed to temporarily hold 8,830,000,000 cubic feet of flood-water. The first reservoir, or that behind the Bohio dam, would have a storage area of about 21 square miles, capable of holding 5,300,000,000 cubic feet; the second reservoir, or that behind the Alhajula dam, would have a storage area of about 10 miles, capable of holding about 3,530,000,000 cubic feet of flood volume. In the plans of the International Commission the Bohio basin would be used as the second level of the canal, while the third level, or the summit, would be supplied from the Alhajula basin. This latter basin would be somewhat removed from the line of the summit level, and its waters brought thereto by a conduit. A masonry dam is proposed for the Alhajula reservoir, and an earth and rock dam for the Bohio basin.

The part of the undertaking which would require the longest time is the excavation of the Culebra cut. The concession which has been made to the Panama Company covers a period extending to 1910, and whatever is done must be accomplished in the remaining ten years. Therefore the question assumes this form: What is the maximum amount of work which can be accomplished on the Culebra cut in ten years? The summit of the Culebra Cut is 361 feet above the sea-level; and under the plan recommended by the International Commission, which places the bottom of the summit level at 68 feet above the sea, the depth of the Culebra Cut, at the highest point of the divide, would be nearly 300 feet. This elevation would require the removal of 14,600,000 cubic yards from the cut, and in the judgment of the International Commission the removal of this volume of material would require about ten years.

The character of the material forming this great cut will be of interest to the Club. The report of the International Commission states that this excavation "represents almost entirely an excavation in hard or rocky ground." Colonel O. H. Ernst, a member of our present Canal Commission, stated before the recent Senate Committee

that the material of this cut "seemed to be an indurated clay. It is a material that is quite hard, but it weathers badly, and I should not venture to cut it to a steeper slope than 1 on 1, say 45°. I would not call it rock in any sense." Colonel Ernst derived his conclusions from an examination of the test pits which had been sunk to the proposed bottom of the excavation, or to points about 68 feet above sea-level. I should assume that the material consists of very dry laminated and indurated clay, such as we are familiar with. The depth of excavation which was carried through the Culebra cut by the De Lesseps Company is only about 66 feet, involving the removal of about 4,000,000 cubic yards of material, and it was in this part of the work that the heavy landslides occurred.

In the execution of this deep cut the International Commission propose to arrange it in a series of berms 16 feet wide for each 33 feet of vertical height, connected by slopes of 2 : 5, except through the clayey material near the top, where the slopes would be 3 : 2. These berms will guard the canal prism against dangerous slides, and also provide steps upon which can be located the steam-shovels to excavate the material, and the railroad tracks upon which the excavation will be removed to distant points.

Under the plans of the International Commission the entire prism excavation of the canal would require the removal of 38,000,000 cubic yards of earth and 28,000,000 cubic yards of rock, or an aggregate of 66,000,000 cubic yards of material. The estimate for the excavation of this material is placed by the French Commission at from 58 to 68 cents per cubic meter for ordinary excavation, and $1.06 per cubic meter for rocky material, including the disposal of the same.

This is the total estimate of earth and rock to be removed. In the present estimates of the International Commission no allowance is made for work done under the De Lesseps project, such work being simply allowed as replacing possible underestimates of work yet to be done. It has been reported that about two-fifths of the work has been done, but this statement is not justified by any official report.

Whatever advantages the Panama route may have, from an engineer's point of view, there is a serious disadvantage which underlies the whole question. While the Panama canal might be built, as an abstract fact, for from $100,000,000 to $125,000,000, it should not be forgotten that the present French company owns the concession,

the right of way, the Panama railroad, and much else that would require purchase from the present owners before the construction of the canal could be entered upon. It can only be guessed what the French company would sell out for. Some have placed the amount at about $100,000,000. They claim to have expended about twice that amount, but the evidence is not to be seen on the ground.

If $100,000,000 must be paid the French company for what they have, and another $100,000,000 expended in the construction of the canal, we have an aggregate cost of $200,000,000 at least. The question of what it would cost other parties to secure the right to construct the canal will seriously embarrass outsiders from entering upon the enterprise.

Some reference to the dimensions of the canal, and of the locks and gates proposed by the International Commission, may be of interest. The locks are to be twin locks, 738 feet long and 82 feet wide. The lock-gates will be single doors, with a total height of from 60 to 75 feet. The canal prism is to have a bottom width of 164 feet in earth, and 170 feet in rock, throughout the Bohio level. In the summit level and through the Culebra cut the bottom width will be 118 feet. Through the sea-level the bottom width will be 98 feet in earth, and 111 feet in rock. These widths can subsequently be easily increased by dredging. Suitable turnouts are provided along the canal.

Outside of all questions as to the cost of an Isthmian canal, the great advantages of a sea-level canal, or one without locks except at the sea entrances, can not fail to impress itself upon our minds. Consider the danger and physical difficulties surrounding the safe lifting on one side, and the lowering on the other side, through a vertical height of 100 feet, of a modern ocean steamer weighing 20,000 tons and valued, with its cargo, at many million dollars. Consider the danger to lock-gates from the $M V^2$ of such a steamer, almost at rest, if you please, and what would result from the wreckage of such a steamer in the canal prism or in its locks. Truly, there is much in such possibilities to justify vastly greater initial expenditures for a sea-level canal; and personally I believe that they will have weight in leading to conclusions against a great isthmian canal with locks; and that an expenditure of even $300,000,000 for a sea-level canal would be wiser than half that amount applied to such canals as have been under consideration.

HIGH SPEED TOOTHED GEARING.

JAMES CHRISTIE.

Read December 5, 1900.

FOR the transmission of power it frequently becomes necessary to use toothed gearing, subjected to high peripheral speed, conjointly with high pressure per unit of tooth contact, and the object of these remarks is to record what has been successfully done in recent years, as much higher speeds are now successfully attained than formerly. Considered in a static sense, the gear tooth satisfies the condition of stress if it is proportioned to endure forces acting transversely on it, and the pressure per unit of contact is not of such intensity as permanently to deform the curved bearing surface of the teeth. When in motion, the curved surfaces slide upon each other as they enter and leave contact, and when this sliding action is accompanied with high pressure, the limit of endurance is soon reached, and in the case of inferior materials, this occurs at comparatively low speeds and pressures. In addition to this, more or less impact usually occurs, especially when the resistance is of a fluctuating character or the loads are suddenly applied. The effects of this hammering action are discernible by a flattening of the curved faces of the teeth, after which the proper engagement of the teeth ceases and the gear is speedily destroyed.

To prevent this, it is desirable to cut the teeth so accurately that no side clearance or "back lash" exists, and this is now usually done on first-class gearing of even the largest dimensions. Owing to the low elastic limit of cast-iron and the bronzes, we can not expect these metals to endure so high a pressure as steel, and steel appears to be the most trustworthy material to endure the highest pressures and speeds. This assertion, however, does not apply to all grades of steel. Soft steel surfaces abrade or cut very readily despite all methods of lubrication, and surfaces of this material should never be allowed to engage in sliding contact. Gearing of soft steel is usually destroyed by abrasion at quite moderate speeds. Rolling-mill pinions of steel, containing 0.3 per cent. carbon, have been destroyed in a few months, whereas the same pattern in steel of 0.6 per cent. carbon has done similar work for several years without distress. Of course, it is

necessary to shape the teeth to a proper curve to insure proper engagement and uniform angular velocity.

Some years ago there was required suitable gearing to connect the engines to a rolling-mill in this vicinity. The diameters of the wheels were 37.6″ and 56.4″ respectively. They were intended to revolve at speeds of 150 and 100 R. P. M. and expected to transmit about 2500 H. P. The character of the service was such that renewal was a serious matter and long endurance very desirable. A high grade of steel was selected, especially in the pinion, in which the greatest wear would occur, and which, owing to the location, was the most difficult to replace. The pinion was forged from fluid compressed steel of the following composition:

Carbon,	0.86 per cent.
Manganese,	0.51 "
Silicon,	0.27 "
Phosphorus and sulphur, both below	0.03 "

The spur wheel was an annealed steel casting:

Carbon,	0.47 per cent.
Manganese,	0.66 "
Phosphorus and sulphur, both	0.05 "

The tooth dimensions were: Pitch, 4.92″; face, 24″. (See Fig. 1.) These were accurately cut with involute curves generated by a rolling tangent of 16 degrees obliquity. No side clearance was allowed. After starting the mill, it was found that a higher speed was practicable than was originally contemplated. Higher pressures on the teeth were also applied, so that ultimately about 3300 H.P. was transmitted through the gearing, corresponding to a pressure of nearly 2100 pounds per inch of face. The speed was variable, but occasionally attained a velocity of 260 R.P.M. for the pinion, corresponding to a peripheral velocity of 2500 feet per minute. This gearing has been in constant operation for several years and behaves satisfactorily.

The highest recorded speed for gearing that I can recall is that described by Mr. Geyelin in the Club "Proceedings" of June, 1894. The mortise bevels had a peripheral velocity of 3900 feet per minute, but the pressure per inch of face was only about 680 pounds, the diameter and speed being made high to reduce the pressure on the

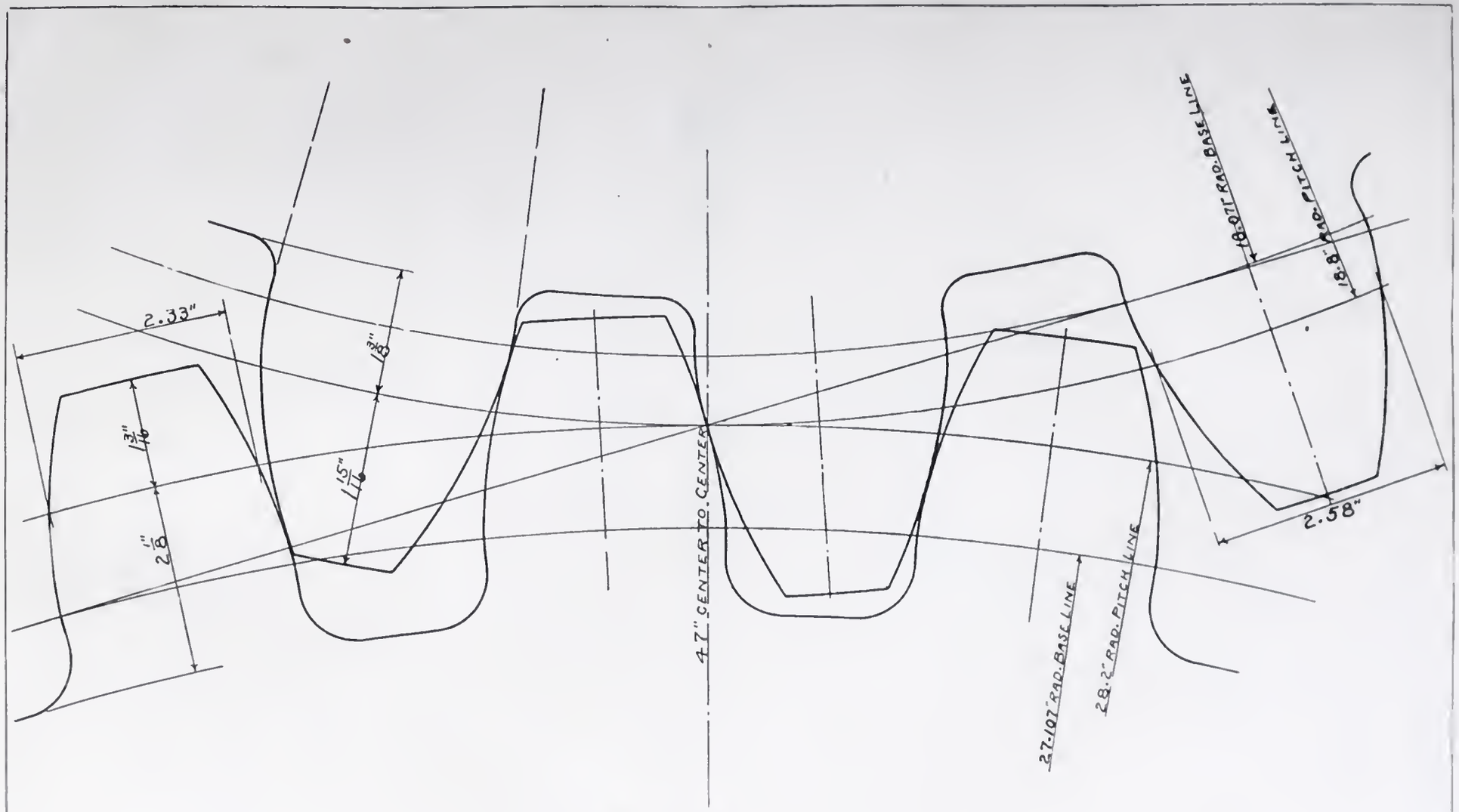
2.33"
1 3/8"
1 3/16"
1 15/16"
2 1/8"
47" CENTER TO CENTER
27.107" RAD. BASE LINE
28.2" RAD. PITCH LINE
18.071" RAD. BASE LINE
18.8" RAD. PITCH LINE
2.58"

Fig. 1

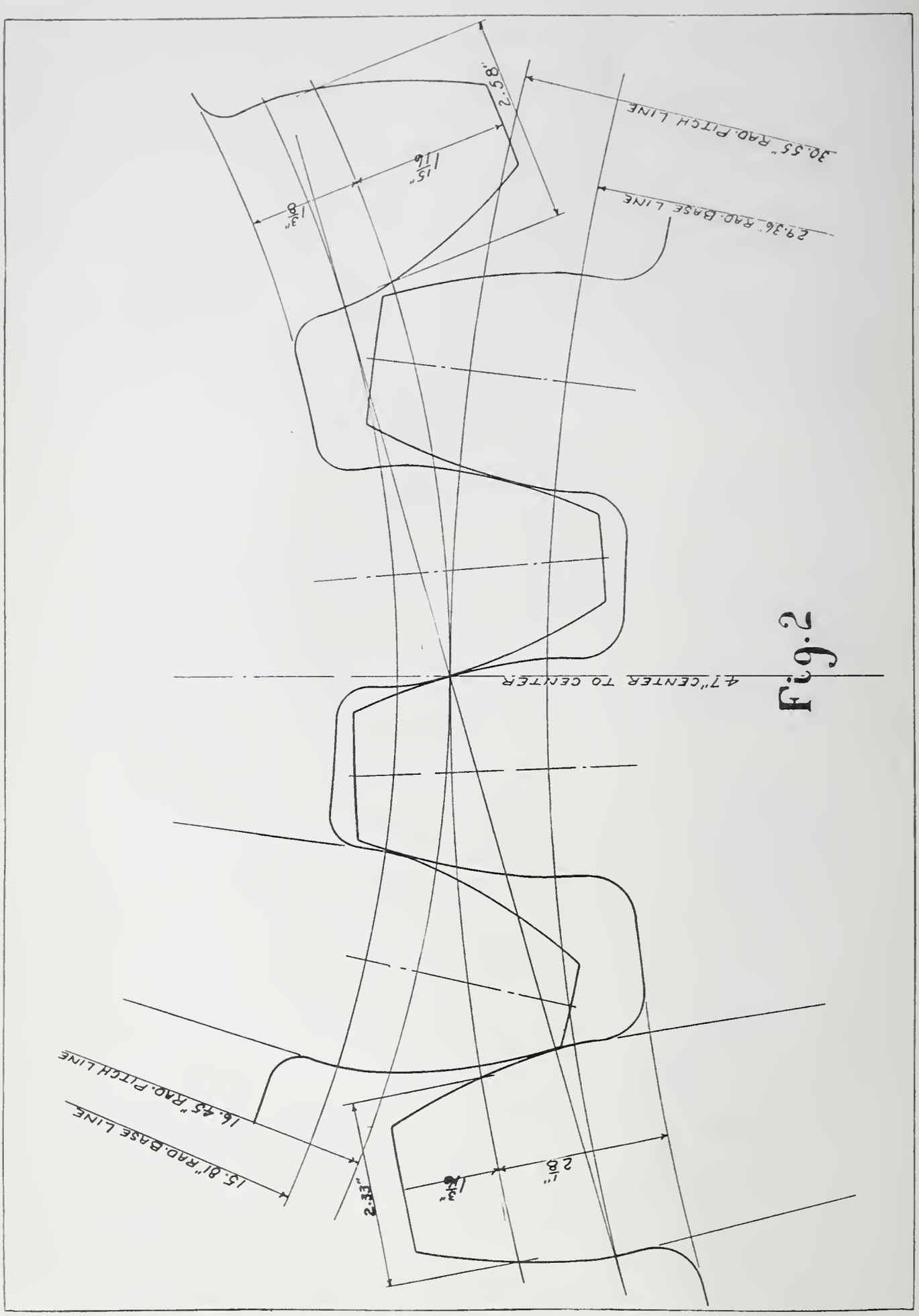
2.58"
30.55" RAD. PITCH LINE
29.36" RAD. BASE LINE
4.7" CENTER TO CENTER
15.81" RAD. BASE LINE
16.45" RAD. PITCH LINE
2.33"

Fig. 2

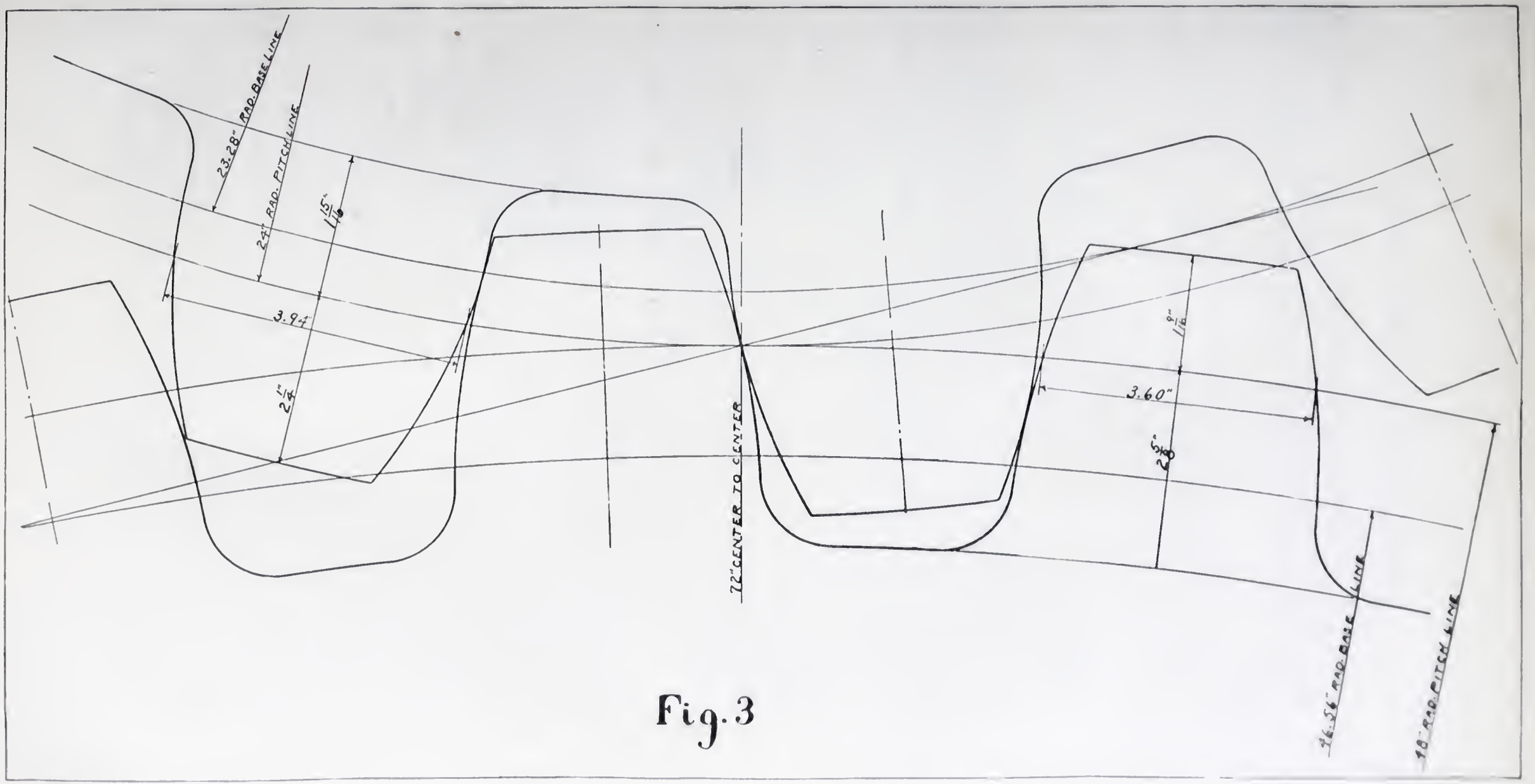
23.28" RAD. BASE LINE
24" RAD. PITCH LINE
15 1/16"
3.94"
2 1/4"
22" CENTER TO CENTER
3.60"
2 5/8"
9/16"
16.56" RAD. BASE LINE
18" RAD. PITCH LINE

Fig. 3

teeth. I understand that the lifetime of these bevels is not long. If made of a grade of steel, as previously described, their diameter and speed could be considerably reduced, and prolonged endurance would be realized.

About the same time No. 1 was installed a similar application was made to another mill, the gear having a different speed ratio, and the angular velocity being lower (see Fig. 2):

	Pinion.	*Wheel.*
Carbon,	0.90 per cent.	0.60 per cent.
Manganese,	0.64 "	0.64 "

A much larger set had been previously employed, transmitting about 2400 H.P. at 750 feet per minute peripheral speed, involving a pressure per inch of face of 3500 pounds. This latter pair were 4 feet and 8 feet respectively, $7\frac{1}{2}''$ pitch, $30''$ face, cut with involute teeth of 14 degrees obliquity. (See Fig. 3.)

	Pinion.	*Wheel.*
Carbon,	0.52	0.42
Manganese,	0.55	0.73
Silicon,	0.107	0.279
Phosphorus,	0.022	0.078
Sulphur,	0.02	0.05

These gears have all rendered excellent service, and to-day are apparently as good as at the beginning.

As considerable expense is involved in cutting large gears of hard steel, it is sometimes practicable to rough-cut the gear after it is made as soft as possible by slow cooling, a higher degree of hardening being imparted before final finishing by air hardening or rapid cooling from the refining heat. This is not infrequently done in the case of screws and gears of moderate dimensions. In this event it is desirable to have the ratio of manganese low, say not over 0.5 per cent. or 0.6 per cent.; as a high manganese content seems to impart a permanent hardness that is not readily reduced by slow cooling.

The subject of standard forms of teeth has recently become a matter of considerable interest, especially since the introduction of the electric motor, which has created a demand for accurate speed gear. Cycloidal curves so extensively used in the past seem to be less used in recent years than involute, for well-known reasons. The essential conditions required are that the osculating curves of the teeth must be normal to

the point of tangency of the wheels throughout the arc of tooth engagement. Accepting the involute curve as a standard, it is desirable to adopt a uniform angle of obliquity for the generating tangent. The adoption of an angle of 15 degrees by a prominent manufacturer of cut gearing and cutters has led to an extended acceptance of this standard. It is claimed that this is not advisable, but as Mr. Lewis is to discuss this feature of the subject, I will not enlarge upon it further than to observe that Mr. Hawkins, who was one of the early investigators of the merits of the involute form of tooth in the middle of the century, recommended an obliquity of 20 degrees, and asserted that no practical inconvenience would be found from the resultant lateral thrust on the shaft journals.

When all other conditions are satisfactory, the flatter the curve of the tooth, the better, inasmuch as with a curve of long radius a higher pressure can be sustained than otherwise. With the ordinary straight tooth gear it is necessary to make the tooth of sufficient length, so that normal action never ceases between successive teeth. The wearing abrasion occurs when the teeth are entering and leaving normal contact. For this reason, for very high speeds some form of the stepped or spiral tooth would appear to be favorable, using a short tooth and a minute arc of engagement on the line of centers for each section of the tooth.

It appears to be practicable to maintain sliding surfaces of steel if one of the surfaces is hard, even if the other is comparatively soft, but for steel gearing for ordinary purposes I would suggest the use of steel not less than 0.4 carbon. If the speeds and pressures are unusually high, a much harder grade of steel becomes necessary. When a small pinion engages with a large wheel, the former alone can be made of high-grade steel approaching to a carbon content of 1 per cent. When extreme speeds and pressures become necessary, the best results will be found by using in both wheels steel having a carbon content approaching 1 per cent., or an equal hardness, obtained by lower carbon and high manganese or other desirable hardening addition. With gearing accurately cut from steel of this character and securely mounted, it is believed that reasonable endurance will be obtained when the product of speed and pressure, divided by pitch, each within certain limits, does not exceed 1,000,000: for example, a speed of 3000 feet per minute and 1600 pounds pressure per inch of

face, or vice versa; for gear of 5-inch pitch, assuming, so far as we know, a maximum speed of 5000 feet per minute for gear of any pitch, and permissible pressure to be proportional to the pitch.

This statement that speeds and pressures are reciprocal, or as one is increased the other must be reduced, in a fixed ratio, may not strictly be a rational one, but in a broad and general sense it is correct within the usual limits of practice.

It will be understood that such a generalization as herein stated would apply to pinions having a liberal and not the minimum number of teeth.

INTERCHANGEABLE GEARING.

WILFRED LEWIS.

Read December 5, 1900.

It is well understood that the teeth of gears may be varied indefinitely in shape, provided that their forms are generated by rolling something on the pitch-line of the gear-wheel. This describing outline may be a straight line, a circle, a logarithmic spiral, or anything else that will roll, but it can not be of a shape that will not roll continuously in contact on the pitch-line of the gear-wheel as far as may be necessary to form the tooth profile.

Much attention has been paid to the forms best adapted to various combinations of teeth, with a view to engaging as many teeth as possible in action, and increasing the arc of recess over that of approach for the sake of efficiency and smoothness in running. When such gears are made in pairs, to run only with each other, no reason may at first appear why the forms of their teeth should not be determined by these considerations alone, but sooner or later the patterns or cutters made especially for a certain combination of gears will surely be wanted for other conditions to which they do not particularly apply, and then it will be regretted that the teeth were not shaped for a larger range of usefulness. To be sure this would involve a partial sacrifice of the advantages originally sought, but when one pattern or cutter can be made to serve almost as well as two or three, it does not pay to be too critical and particular about the fine points mentioned, the importance of which I believe has been largely overestimated. Of course, it is better that the arc of recess should be longer than that of approach, to reduce friction and drive as nearly as possible at right angles to the line of centers, and it is also desirable, for the sake of smoothness in running, to have a long arc of action, to which the arc of approach contributes as well as the arc of recess, but a gear-wheel for general use may drive or be driven, and its arcs of approach and recess should, therefore, not be very different. It is also admitted that obliquity of action has something to do

with the efficiency of gearing, but the question arises, how much is efficiency affected thereby? For a long time involute teeth were avoided by some builders because of the thrust along the line of centers, which the early text-books pointed out as causing so much additional and unnecessary journal friction, and instead of involute forms a cycloidal system was quite generally adopted, in which the describing circle had a diameter one-half that of a twelve-toothed pinion. In this system the obliquity of action varies along the path of contact from zero at the pitch-point to about 23° at the end of a rack tooth, or 20° at the end of a pinion tooth, making the general average of obliquity about 11°.

Along with this system arose the 15° involute system, for which Prof. Willis designed his odontograph, and a $14\frac{1}{2}°$ system, for which the excuse has been made that the angle is easily laid off because its sine is practically $\frac{1}{4}$. But there is no advantage in this over 15°, which may be quite as easily and more accurately originated, and probably the only advantage to be claimed is on the ground of thrust against the wheel centers.

It is readily seen that this thrust on centers is proportional to the tangent of the obliquity, which for 11° is 0.194; for $14\frac{1}{2}°$, 0.259; and for 15°, 0.268; but these figures by no means represent the increase in pressure on journals due to the obliquity, because combined with the thrust there is always a normal driving pressure far greater in amount; and, it may be asked, what are journals for if not to take pressure in any direction? Obviously, the pressure on journals for different degrees of obliquity is measured by the secant of the angle, and not by its tangent, and the three systems should, therefore, be compared as follows:

$11°$ cycloidal, secant $11° = 1.0187$
$14\frac{1}{2}°$ involute, secant $14\frac{1}{2}° = 1.0329$
$15°$ involute, secant $15° = 1.0353.$

The differences in journal pressure for these systems are therefore very slight, and their differences in efficiency are still less, because, as demonstrated by George B. Grant some years ago, the obliquity of action in involute gearing has no effect whatever upon the friction-loss in the teeth themselves. The sliding diminishes at the same rate as the pressure increases, and the loss in effect, whatever it may be, is wholly due to journal friction.

The practical consideration of cost demands the formation of gear-teeth upon some interchangeable system.

The cycloidal system can not compete with the involute, because its cutters are formed with greater difficulty and less accuracy, and a further expense is entailed by the necessity for more accurate center distances. Cycloidal teeth must not only be accurately spaced and shaped, but their wheel centers must be fixed with equal care to obtain satisfactory results. Cut gears are not only more expensive in this system, but also, when patterns are made for castings, the double curved faces require far more time and care in chiseling. An involute tooth can be shaped with a straight-edged tool, such as a chisel or a plane, while the flanks of cycloidal teeth require special tools, approximating in curvature the outline desired. It is, therefore, hardly necessary to argue any further against the use of cycloidal gear-teeth, which have been declining in popularity for many years, and the question now to be considered is the angle of obliquity most desirable for interchangeable involute teeth.

The importance of this question was impressed upon me about fourteen years ago, at which time Wm. Sellers & Co. contemplated a change from the cycloidal system above described to an involute of which the obliquity was to be determined. A careful investigation of the subject in all its aspects then led me to the conclusion that to be entirely satisfactory between the limits of a twelve-toothed pinion and a rack an obliquity of $22\frac{1}{2}°$ was required, but in view of the fact that twelve-toothed pinions would more frequently engage other gears than racks, an obliquity of 20° was finally adopted. This increase of 5° over common practice then seemed so radical a departure from all previous experience that it was undertaken with some hesitation and the apprehension of a return later on to a more conservative amount, but the only regret has been that the larger angle was not adopted, without regard to any preconceived notions. By common consent the addendum distance on all gear-teeth is between 0.3 and $\frac{1}{3}$ of the pitch, 0.3 pitch being used for circumferential pitches, and $\frac{1}{n}$ (n being the number per inch) for diametral pitches. The firm of Wm. Sellers & Co. uses the former in both cases, but the general tendency seems to be the other way, on account of its convenience. $\frac{1}{n}$ is equivalent to $\frac{p}{\pi}$ or $0.3283\,p$, and the difference is, therefore, slight. Occasionally there is some discussion about the merits of long and short

teeth, shorter teeth being advocated for their greater strength, and in certain combinations it is quite possible to use them, but in an interchangeable system the addendum must be long enough to insure an arc of action that will safely cover the pitch in all cases. It is, therefore, not thought desirable to suggest a change in this well-established particular.

The difficulty encountered in the use of involute gearing of common obliquity—$14\frac{1}{2}°$ or 15°—is known as interference. This is most apparent between racks and pinions, and is due to the path described by the point of the rack tooth crossing the involute face of the pinion near the base-line. A very important part of the acting face of the pinion must then be cut away to clear the rack at the loss of a large part of the arc of action, or the end of the rack tooth must be rounded, thus destroying its claim to the advantages of the involute system and giving it a mongrel character. To avoid this defect, which occurs in the common systems to all pinions of less than thirty teeth, it is necessary to increase the obliquity,

letting a = addendum in terms of the pitch.
α = obliquity.
n = smallest number of teeth to engage with a rack without interference.

Then it can be shown that $\sin^2 \alpha = \frac{2a}{n}$ (1); and assuming $a = 0.3$ and n = 12, we have $\sin^2 \alpha = \frac{\pi}{20} = 0.15708$, whence $\alpha = 23° 19'$.

Making $\alpha = 20°$ and $a = 0.3$, as in the Sellers' system, we have n = 16, and it has been found by experience that the interference is noticeable between twelve-toothed pinions and such gears as they frequently engage, of from thirty to sixty teeth.

Letting $a = 0.3283$ in equation (1), we have $\sin^2 \alpha = \frac{2}{n}$, from which n = 30. The angle $22\frac{1}{2}°$ is suggested as a convenient one to adopt, being a quarter of the quadrant, and for this it is believed the interference between a twelve-toothed pinion and a rack will be practically imperceptible. For $a = \frac{p}{\pi}$ we shall then have $n = \frac{2}{\sin^2 22\frac{1}{2}} = 13.35$; and for $a = 0.3$, n = 12.87.

The pressure on journals will be increased to secant $22\frac{1}{2}° = 1.0824$, which is only about 5 per cent. more than usual.

The arc of action will always cover the pitch by a margin of 0.3 to 0.6 thereof, and it will vary but little in extreme cases.

The wear on the teeth of pinions will be less concentrated at the

base-line, and by avoiding interference, their arc of action is actually increased. It may be urged that the whole load is necessarily concentrated on a single tooth, and without denying this, I maintain that such is generally the case in any system of gearing, however long the arc of action may appear on paper. A division of the load on several teeth implies absolute perfection in forming and spacing the teeth, a condition never attained in practice, and it is therefore never safe to assume that the load is carried by more than one tooth under any circumstances. Frequently the service required of gearing necessitates a change in pitch due to wear at some part of the circumference more than at others. For example, in a punching machine the load is concentrated on a few teeth, which do the work while the others have comparatively nothing to do, and as the working teeth wear away there is necessarily a change of pitch between them and the others not so worn, while the pinion probably wears all over and retains a uniform pitch.

By the adoption of $22\frac{1}{2}°$ obliquity a considerable increase in the strength of teeth will be effected in addition to the advantages already mentioned, and if it is within the province of The Engineer's Club of Philadelphia to advocate much-needed reforms in engineering practice, I would suggest "Uniformity in Interchangeable Gearing" as a subject worthy of its attention. By the action of the Franklin Institute more than thirty years ago a standard system of screw-threads was inaugurated, and if by the interchange of opinions an agreement among engineers can be reached as to what system of gearing is best for general adoption, the needless diversity which now exists may gradually disappear.

The object of this paper is not to direct an expression of opinion in concurrence with the views here expressed, so much as to bring out well-considered discussion leading to the formation of sound opinions.

I realize that a good deal may be said against the introduction of a new system of gearing differing from those already in use, and that it may be impracticable in many cases to make any change, however desirable, but with the great improvements that have recently been made in the methods of gear cutting a change of system is not so serious a matter as it was a few years ago.

Uniformity in interchangeable gearing by all builders of machinery is certainly to be desired, and to this end it should be possible for en-

gineers to agree upon the system most worthy of adoption, leaving the question of expediency to take care of itself.

DISCUSSION.

E. Graves.—Mr. Christie made reference to some gear wheels concerning which I wish to give some further particulars. These consist of three sets of cast-steel bevel-wheels, all duplicates. The pinions are the drivers, and are 57.39″ pitch-line diameter, have 36 teeth, 5″ pitch and 20″ face. The wheels are 74.8″ diameter, have 47 teeth of same face. The teeth are carefully cut to involute layout, and are 3.43″ high,—1.59″ above pitch-line, 1.84″ below pitch-line,—and $2\frac{15}{32}$″ thick on pitch-line. The normal speed of pinion is 260 R. P. M., giving 200 revolutions to the wheel, and nearly 4000 feet circumferential speed on pitch-line. The transmission is 1300 H. P. Assuming that the entire load should come on the outer end of one tooth, and was equally distributed along its length, the result would be 2100 pounds per square inch fiber strain at the root of the tooth.

The pinion is mounted on the upper end of a vertical shaft 148 feet long. This shaft is 10″ diameter, and the sections are joined together with solid forged-on flange couplings. At the lower end is the runner of a turbine driving-wheel having upward discharge. The upper section of shaft is provided with a thrust bearing. When the turbine gate is only partially opened, the weight of the shaft results in a downward pressure in this bearing; with full gate opening, the weight of the shaft is more than overcome and the result is an upward pressure in thrust bearing. This thrust bearing is of rings turned out of an enlarged forging in much the same manner as steamship-shaft thrust bearings. The thrust collars are divided so that one portion resists the longitudinal motion to the shaft in one direction, and the remaining portion in the opposite direction; these two sets are adjustable in reference to each other, so that the longitudinal motion to shaft does not exceed about $\frac{1}{32}$″. The whole bearing is inclosed in a tight case, and is lubricated by forced pressure of oil fed through center of shaft, with exit openings at each thrust ring. The longitudinal motion to horizontal shafts is limited by the back bearing of wheel center. Both shafts extend through the gears and are supported in a massive bridge casting, with bearings adjustable. Gears are inclosed in a casing and are lubricated by oil fed under pressure through several small jets applied just in front of teeth as they mesh together.

These gears have been in service for five years; their behavior, however, has not been wholly up to expectations. Their wearing power, in the sense of resisting abrasion, is satisfactory, but at different times teeth have been broken out. This breaking has been confined entirely to the pinion, and the nature of the break is the same in all cases, evidently beginning at the large end, cracking around the root, and following along the tooth. In some cases the break has followed more than half the length of the tooth and the piece has been thrown out; in most cases the existence of the crack in its early stages has been detected

by the sound of the gear in action. The quality of the steel in castings is the ordinary commercial article. The widest variation in analysis observed is, in one instance:

Silicon,	0.25
Sulphur,	0.036
Phosphorus,	0.071
Manganese,	0.74
Carbon,	0.31

Another:

Silicon,	0.27
Sulphur,	0.03
Phosphorus,	0.032
Manganese,	0.80
Carbon,	0.23

As is to be expected, the softer metal has resisted breaking the longer. In two sets of these gears the resisting work is of a varying nature with sudden and wide fluctuations; in the third instance the working is more constant. This variation of conditions does not seem to have influenced failure, as the teeth have broken in all the sets.

One of the practical difficulties in operating bevel gears of the nature described is the difficulty of holding them so that they will be in proper contact; longitudinal motion in either shaft throws them out of pitch. The most serious problem, however, is in securing and maintaining shafts so that the extended axis-lines of same pass through a common point. The effect of power transmission from pinion to gear is to put these axis-lines out of position, moving them in opposite directions and resulting in end contact of teeth and concentrated load instead of evenly distributing the load along the whole length of tooth. In this particular the question of maintaining bevel gears is decidedly more of a problem than that of spur gears. In this latter case small end motions of carrying shafts produce no effect, while the wearing of bearings is only the shifting of pitch-line, and, as it occurs slowly, it will, within reasonable limits, adjust itself.

As a matter of further interest, I will mention that in this same room with these gears are three other sets of bevel gear having cut-steel pinions and mortise wheel with cast-iron rims. The diameters and ratios of these—speeds, mountings, and service—are practically the same as those described, but the transmission of power is 1100 instead of 1300 H. P. The pinions have 33 teeth, $5\frac{1}{2}''$ pitch, with 20″ face, the teeth being planed down to $2\frac{1}{4}''$ thickness on pitch-line. The wheels have 43 teeth. These gears have been in service some seven years. None of the pinions has ever given way; the wooden teeth in the wheels, however, last only from six weeks to two months, an extra rim being kept on hand for refilling and replacing.

L. F. Rondinella.—I wish to say a word on the history of the use of cycloidal and involute curves in gear teeth, which has been alluded to by Mr.

Lewis. The cycloidal curves were advocated by Willis and by Reuleaux (the English and the German authorities on mechanics), who both recommended an angle of obliquity at the pitch-line of fifteen degrees, Willis explaining that he adopted this angle because he found "by various trials" that it gave "the best form to the teeth."* On account of the difficulty of drawing the accurate curves, these two authors also gave methods of construction to represent them approximately by circular arcs, and while Willis' method was for a straight-flank pinion of twelve teeth, and Reuleaux's† for one of eleven teeth, they produce identical results when the same constants are used. I have combined and simplified these two methods into one, which I have used for many years with my students in drafting at the Central Manual Training School. With regard to the involute curve in the teeth of wheels, it was Willis who proposed the angle of $14\frac{1}{2}$ degrees as "a very convenient value," because its sine "equals one-quarter very nearly."‡ His method of construction for finding a circular arc that approximates to the involute I have simplified also by using thirty-one thirty-seconds (which is as nearly correct) for the *cosine* of this angle of obliquity. My methods of construction, together with tables from which the resultant values can be got directly, may be found in "Notes on the Design of Gear Wheels," published in the "Journal of the Franklin Institute," April, 1894. By drawings carefully made at that time I compared circular arcs got by these methods with the true cycloidal curves through the same pitch points, and found that the approximate cycloid was almost perfect for the teeth of a rack, while for the teeth of a wheel the approximate epicycloid made the points a trifle narrow and the approximate hypocycloid made the flanks a trifle thick. It is only recently, however, that I have tested Willis' method for the approximate involute for the teeth of wheels, and I find that it makes the points of the teeth much too narrow; and that a radius equal to three-eighths (instead of one-fourth) of the pitch radius is needed to produce a circular arc that approximates very closely to the true involute with this obliquity. It is, perhaps, fortunate that this error existed in Willis' method, for it has probably prevented the disastrous results of interference in many cases when employed where this angle of obliquity has been used (as it should not be) for a wheel with less than thirty teeth. The advantages of using a larger angle of obliquity for involute teeth have only recently been appreciated.

Mr. Lewis.—In regard to approximate methods, I would say that for many years the firm of William Sellers & Co. generated cutters by means of two circular arcs, but finally came to the conclusion that no approximate method whatever is satisfactory for gears which had to run at any speed. It is not sufficiently accurate, and the error in form can not be detected on paper because no drawing can be made close enough. The curve must be mechanically generated to form gears that will run at the speeds required by modern practice.

---

* "Principles of Mechanism," Second Edition, p. 134.

† "Kinematics of Machinery," pp. 161 and 163.

‡ "Principles of Mechanism," Second Edition, p. 133.

It might be well enough to lay out castings for slow-running gears by circular arcs, but as soon as any speed is developed, the departure from the true shape is at once noticed, and the greater the speed, the more deafening the noise. The machine, therefore, which was originally designed to approximate the shape by circular arcs was converted into a machine which actually described the shapes—the cycloidal and the hypocycloidal curves. But that was finally displaced by another generating machine for involute teeth, the advantages of the involute system having become very apparent.

In regard to the pressures carried by gear teeth, Mr. Christie seems to lay down a rule making the product of speed and pressure constant. This would reduce the load in proportion to the speed, and it seems to me an open question whether that should be adhered to or not. I do not think it has been demonstrated how the pressure of the teeth should vary with the speed. Some experiments, I think, should be made which would indicate that more clearly than has heretofore been done. It is interesting to note his remarks regarding the influence of the hardness of the metal upon the pressures carried, and instead of reckoning the pressure by the inch as so much per inch of face, it seems to me the pitch should also be included, because the face of a gear tooth is very much like a roller, and the pressure carried by a roller varies with its diameter as well as with the face. Some authorities seem to think that it should vary with the square root of the diameter; others directly with the diameter, and I am inclined to the latter opinion. If gear teeth are proportioned for strength, they are also proportioned for wearing pressure and surface to carry the load.

Mr. J. Christie.—The bevel gears described by Mr. Graves are very interesting and useful as a record. It is much more difficult to obtain satisfactory results with bevels than with plain spurs, as any deviation from correct alinement is fatal to correct tooth action in the former. In this instance, while speed is very high, the pressure on the teeth is comparatively low—about 750 pounds mean pressure per inch of face. Thus the products of speed and pressure in relation to the pitch are considerably below the quantity assumed as a safe maximum.

Regarding the quality of the material, the manganese is too high. While steel of this composition would be moderately hard and wear fairly well, it would be somewhat brittle. It is not surprising to learn that some teeth gave way by fracture. If the relative proportions of carbon and manganese in the steel were reversed, it would be a much better material for the purpose.

I hope Mr. Lewis' thoughtful paper may aid in establishing the desired results: an accepted standard for the shape of teeth. Probably at no time was the confusion more accentuated than at present, owing to the diverse methods of gear cutting practised by different establishments, and the difficulty experienced when an interchange, which frequently occurs, is desired.

Mr. Kondinella.—Of course, the great value of circular arcs approximating closely to the true tooth-curves is for the use of the draftsman, and in a less degree, nowadays, for the use of the pattern-maker afterward. But a draftsman can use a circular arc just as well to represent these curves as he can use a straight line to represent the helix of a screw-thread.

W. Trinks.—I wish to call attention to an article on high speed gearing in the November and December numbers of the "Zeitschrift des Vereins deutscher Ingenieure," 1899, by the chief engineer of the General Electric Company, at Berlin, Germany. The experiments show that there is no rule for the relation between pressure and speed; it depends upon accuracy: the load on the teeth may be the higher the more accurately the gears are made. A remarkable method of manufacturing gears was the outcome of the experiment. The curves are laid out on paper three or four times the size of the real tooth, reduced to proper size by photography, transferred on sheet steel, and etched in. Thus the highest degree of accuracy is obtained.

It was found that neither cycloidal nor involute curves gave the best results. Another curve was developed with a view to reducing the sliding motion between the teeth. The article contains very interesting diagrams on this point. By dividing the length of two working teeth into an equal number of parts, the amount of sliding action can be determined and the fact shown that it is reduced to a minimum by these methods.

Another thing shown by the paper is never to place a fly-wheel close to a gear. If possible, have a good length of shaft between. Slight inaccuracies in the pitch of the wheel require acceleration or retardation of the mass, and in order to do this force is needed. This force causes a hammering on the teeth which may break them; in other words, plenty of elastic material should be between the inertia masses and the gears. I feel pretty sure that all engineers will be much interested in the article; it is a valuable treatise on high speed gearing.

A HISTORICAL SKETCH OF THE ENGINEERS' CLUB OF PHILADELPHIA.

EDGAR MARBURG.

Read at the Celebration of the Twenty-third Anniversary of the Founding of the Club, December 15, 1900.

LADIES AND GENTLEMEN:

The function this evening is designed to commemorate the day, twenty-three years ago, that witnessed the founding of The Engineers' Club of Philadelphia. The observance of this day, henceforth to be known as Anniversary Day, is expected to become a pleasant annual feature in the future life of the Club. It seemed fitting that at this, its initial celebration, a brief account should be given of the Club's origin, its early history and subsequent development.

If there be one quality that marks the engineer above the average of his fellows, that quality, be it said in all modesty, is modesty itself. Logically, then, the beginning of the Club could not well have borne a different stamp. On the 17th of December, 1877, a small assemblage of serious-minded young men, twenty-one in number and little more in average age, gathered at the home of Dr. Coleman Sellers, 3301 Baring Street, for the avowed purpose of establishing closer social and professional relations between young men engaged in engineering pursuits. This meeting was itself the issue of two social gatherings of a purely informal character, held during the fall of the same year at the residences of Messrs. Charles E. Billin and Charles A. Young. The seed for the undertaking had, however, been planted the year before during the Centennial Exposition. Both the American Society of Civil Engineers and the American Institute of Mining Engineers, with commendable forethought, had established admirably appointed headquarters in this city for the convenience of American and foreign engineers visiting the exposition. The American Institute of Mining Engineers had fitted up commodious apartments at Eleventh and Girard Streets, in the same block in which our Club has its present habitation. Throughout the centennial season informal meetings, or conversa-

ziones, as they were called, were held here on Thursday evenings, at which, in addition to the social interchange of opinions between engineers from all corners of the globe, addresses or familiar talks were held on a great variety of engineering topics. The pronounced success of these meetings, as well as the intelligent and thoughtful provision for the needs of foreigners, was due especially to the zealous efforts of one of our own charter members, Mr. William G. Neilson, upon whom a decoration was bestowed by the Emperor of Germany, in recognition of his services in that connection to German engineers.

It appears that the organization of The Engineers' Club of Philadelphia was prompted primarily by pleasant recollections of these very delightful Thursday evening meetings held during 1876. To return to the event, the anniversary of which we are now commemorating, it is recorded that the meeting was called to order by Mr. Coleman Sellers, Jr., who credited Mr. Charles E. Billin with the conception of the idea, which he bade him lay before the meeting in fuller outline. Mr. Billin's remarks on this interesting occasion are, unfortunately, not on record. That they did not fail in their purpose is attested by the fact that a permanent organization was immediately effected by the election of officers and the appointment of a committee on constitution and by-laws. With due regard to ceremonies befitting so impressive an occasion, the president-elect, Professor L. M. Haupt, was escorted to the chair on the arm of two members appointed by the temporary chairman. The other officers were Mr. Coleman Sellers, Jr., Vice-President, and Mr. Charles E. Billin, Secretary and Treasurer.

It seems to have been the sense of the meeting that the membership should be limited, in the apprehension that too great a number would check the development of that sociability which it was desired to foster. In fact, from the by-laws reported at the next meeting it appears that the active membership was originally limited to fifty.

All persons in attendance at the organization meeting, and at the two social gatherings previously held, to the number of twenty-three, were declared charter members of the Club. Of these, four have remained steadfast in their allegiance to this day.*

---

* Charles E. Billin, Wilfred Lewis, M. R. Mucklé, Jr., William G. Wilson.

It is recorded in the minutes of the first meeting that a member offered the somewhat drastic suggestion that, with a view to maintaining control of engineering positions, a system should be inaugurated for effectively suppressing young men who might contemplate entering the engineering profession. The transition from this idea to that of the modern trust is so easy that the responsibility for the latter rests plainly upon our shoulders. The means by which this suppression was to be effected were not specified. It seems, however, that the matter was not pressed against the protests of the President that the proposed scheme might prove disastrous to his own occupation in connection with engineering education.

The constitution and by-laws were submitted and discussed at the next meeting, held on January 8, 1878, and in their final amended form were adopted on January 19th of that year. The constitution provided that "this Association shall be called The Engineers' Club of Philadelphia"; that "its object shall be: the professional improvement of its members, the encouragement of social intercourse among men of practical science, and the advancement of engineering in its several branches"; that "among the means to be employed for attaining these ends shall be periodical meetings for the discussion of scientific subjects and for social intercourse"; that "the memberships shall consist of honorary, corresponding, and active members; and that civil, geological, mining, and mechanical engineers, architects, and other persons who by profession are interested in the advancement of science shall be eligible for admission to membership." A striking commentary on the marvelous, latter-day evolution of engineering is found in the omission of the now so familiar designation of "electrical engineer," in the specific enumeration of those eligible for membership.

The by-laws provided that "meetings shall be held on the first and third Saturdays of each month," a custom that obtains at the present time. The expenses were to be borne wholly by the active members, who were subjected to the modest entrance fee of $1.00 and were liable afterward to periodic assessments as circumstances demanded.

The responsibility for the program was vested in a "Committee on Information," composed of five members, the personnel of which was continually changing by the appointment of two new members at each meeting. This Committee was instructed to "collect notes of new

engineering works and facts and figures of interest to the members of the Club." One member of each Committee was expected to collect newspaper clippings and short articles from periodicals on subjects of especial interest to engineers. It was stipulated that these articles were to be carefully pasted on margined legal cap, that a short résumé of each article was to be given at the meetings, and that the sheets were to be afterward handed over to the Secretary for safe-keeping. While it is somewhat doubtful that the latter requirements were at any time literally observed, there is abundant evidence that the proceedings during this early period were of a most interesting and varied character and distinctly less formal than at the present time.

The policy of the Club was vigorous and enterprising from the start. Scarcely two months in existence, it tendered a reception at the Penn Club, Eighth and Locust Streets, to the American Institute of Mining Engineers, then assembled in this city in annual convention.

The first typographic output appeared soon afterward in the form of a "Committee Report on the Metric System of Weights and Measures." In substance, the Committee recognized the merits of the metric system; heartily recommended its use in professional literature; favored its gradual introduction in practice; but deprecated the immediate compulsory adoption by State or national legislation. It is interesting to recall that at a meeting eighteen years later, almost to a day, a discussion of the same subject resulted in the adoption of a resolution, by a vote of 100 to 60, "that The Engineers' Club of Philadelphia respectfully urges its representatives at Washington to advocate the adoption of the metric system as the only legal standard in the United States, and to promote such international cooperation as will provide unity of practice amongst commercial nations."

At the sixth meeting a special committee was appointed to report upon the telephone and the phonograph, two recent inventions that had produced a sensation throughout the civilized world, no less startling than that created by the discovery of the x-rays within the nearer past.

Before attaining to its first anniversary, the Club had memorialized Congress on behalf of the United States Board for Testing Iron, Steel, and other Materials. Another lengthy memorial had been addressed to the Legislature of Pennsylvania, embodying a strenuous plea on behalf of a geodetic survey of the State. In the discussion

of the latter measure it was stated as an instance of the shocking state of affairs then existing that recently, in retracing the line between Pennsylvania and Delaware, it was found that a Pennsylvania member of the Legislature actually lived in Delaware.

The buoyant confidence in the ultimate destiny of the Club entertained by its energetic founders is, perhaps, in nowise better shown than in the resolution to make the Club's library a circulating one at a time when the same consisted of a single volume. It may be that this measure was prompted in part by the exigencies of the situation, since the Club itself stood at that time on what might be called a circulating footing, having no abiding place that it could call its own. For the first four months the Club led a cheerful, prosperous, though somewhat peripatetic, existence by holding its meetings at the houses of various members. The minutes of those times contain sundry appreciative references to the hospitality dispensed by "mine gracious host," in providing "a most acceptable and refreshing entertainment." It appears also, and much to the credit of these sturdy founders it should be counted, that the serious side of their venture was not allowed to suffer; for after these intervals of good cheer and fellowship, the discussion of so-called "questions for debate" was resumed with unabated vigor and unfailing regularity.

After seven such meetings, an arrangement was effected with the Philadelphia Chapter of the American Institute of Architects for the joint use of their rooms at No. 10 North Merrick Street, on the present site of Broad Street Station. At this location, on the third floor of the building, the first meeting was held on April 6, 1878. In the fall of that year the Club had its full complement of fifty active members, besides a waiting list of encouraging proportions. The new conditions were promptly met by a reorganization on broader lines; the adoption of a new constitution and by-laws; the removal of the former restrictions on the membership; and a substantial increase of dues, with a view especially to publishing the Club's "Proceedings" and thereby extending its sphere of usefulness.

At the beginning of the following year the members had the well-merited satisfaction of greeting the first number of the first volume of the "Proceedings," which led to the immediate establishment of an extensive and exceedingly valuable exchange list. The favor with which this maiden effort was received in outer technical circles may

be fairly judged by the following excerpt from an editorial in the "Engineering News" of March 15, 1879, then, as now, the leading engineering journal in this country: "We are in receipt of the first number of the 'Proceedings of the Engineers' Club of Philadelphia,' edited by Charles E. Billin, Corresponding Secretary. It is a very fine pamphlet of eighty-eight pages, and is the most creditable display of enterprise ever exhibited by any American engineering society." Within a year the first volume, consisting of five numbers, aggregating 294 pages, had been completed and had gained for the Club an enviable reputation both at home and abroad.

The membership had, meanwhile, increased to nearly one hundred; a good nucleus had been created for the library, largely through generous donations on the part of Mrs. Joseph Harrison; and entirely independent quarters had been established at No. 1518 Chestnut Street, where the first meeting was held on September 6, 1879.

The Club's success and permanency were now assured beyond peradventure. Two years later its membership had doubled, and more commodious apartments were secured at No. 1523 Chestnut Street, where the Club met for the first time on December 3, 1881. Within a few years the continued increase of membership again demanded more extended accommodations, and a house was accordingly leased at No. 1122 Girard Street for the exclusive use of the Club. The house-warming took place here on October 17, 1885, and at this location the Club has maintained an existence of uninterrupted prosperity up to the present time.

The proverbial hospitality of the "city of brotherly love" to the stranger within her gates has been well sustained by the Club in courtesies extended on numerous occasions to scientific and technical societies temporarily sojourning in our midst and to distinguished foreign visitors. Especially noteworthy are the reception in honor of Count Ferdinand de Lesseps in March, 1880, and that tendered the delegates to the World's Fair of the Engineering Society of France, in August, 1893, an event which, by their own generous declarations, contributed in no small measure to the enjoyment of their visit to this country. A booklet of over one hundred pages, with illustrative charts, relating to "Objects of Interest to Engineers and others in and about Philadelphia" was prepared by the Club partly for that occasion and to serve the needs of foreign engineers in general who might be attracted

to this country by the World's Fair. This laborious task was voluntarily assumed by one of our energetic members and ex-presidents, Mr. John C. Trautwine, Jr.

The Club's life, on its social side, has been emphasized at various times by receptions, excursions, social meetings, and dinners, with the attempt always to enhance their enjoyment by the avoidance of needless formality.

The legal incorporation of the Club on June 9, 1892, the date of its present charter, marked an important epoch in its affairs.

Within the limits of this brief review no attempt can be made to enumerate the Club's many-sided activities during the twenty-three years of its honorable history. Its published "Proceedings," containing not far from 6000 pages, in seventeen octavo volumes, tell their own story of the Club's achievements in furtherance of the interests for which it stands. Eleven hundred and twenty-five persons have at various times been counted among its members. The list at present comprises 462 names; and the attendance at the semi-monthly meetings shows the gratifying average of no less than 70.

The history of the Club abounds with examples of self-sacrificing devotion to its interests and principles on the part of individual members; of arduous labors willingly assumed, without reward save that which comes from the sense of duty well performed. The Club's policy has ever been marked by wise conservatism, though it has not hesitated to express itself, at proper times, squarely and unequivocally, on public measures touching interests within its province. With modest pride may we look upon its past and ask no better earnest for its future.

OBITUARY.

EMILE C. GEYELIN.

Emile C. Geyelin was born November 15, 1825, in Mulhouse, France, where he received his education as a mechanical hydraulic engineer under Jonval, the distinguished inventor of the Jonval turbine. In the early forties he came to this country for the purpose of introducing this wheel and to practise his profession, and years ago became a naturalized citizen. One of the first of his works was the erection of one of these wheels for the powder-works of Messrs. E. J. Dupont & Co.

In 1851, upon the recommendation of Mr. Frederick Graff, Chief Engineer of the Philadelphia Waterworks, one of the breast-wheels at the Fairmount Pumping Station was replaced by a Geyelin-Jonval turbine. In 1862 three new turbines were started, and during 1867–1871 three others were installed, replacing the remaining breast-wheels. In his report for 1871 Mr. Graff, again Chief Engineer, says of the last of these installations: "Like those previously erected by the same parties, it is an excellent piece of work, and reflects great credit upon the contractors, Messrs. E. Geyelin and I. P. Morris & Co., for the faithful and skilful manner in which they have performed the requirements of their contracts." The seven turbines thus installed are still in operation, furnishing all the power used at that station. About fifty years ago the wheels of the Montreal Waterworks were replaced by the Geyelin turbines. They were subsequently adopted for the waterworks of Augusta, Ga., Watertown, N. Y., Willimantic, Conn., Richmond, Va., and other cities.

In 1875 Mr. Geyelin invented a duplex turbine, designed to run economically at one-third, one-half, or two-thirds gate. As a substitute for the old-fashioned wooden step used in turbines he invented a glass suspension bearing, equally applicable for other heavy upright shafting. This is in use in most of the turbines since erected by Mr. Geyelin.

For nearly thirty years preceding his death Mr. Geyelin was consulting engineer to the firm of R. D. Wood & Co., of Philadelphia, which has installed many plants for the supply of water and for the development of water-power.

One of Mr. Geyelin's most recent works was the erection of turbines for the Niagara Falls Paper Co. Here he applied the pressure of the water to the bottom instead of to the top of the turbine, furnishing a water bearing for the weight of the shaft and of the dynamo. This was accomplished by giving the bottom of the penstock a turn of a half circle and inverting the turbine itself.

Mr. Geyelin was a recognized authority in matters pertaining to water-power, and was frequently consulted as an expert. Among his writings on water-power and waterworks were: A pamphlet addressed to the American Waterworks Association on April 23, 1891, entitled "The Growth of the Philadelphia Waterworks," with remarks as to its further improvement; "A Suggestion for a Pure and Unpolluted Water-supply for Philadelphia"; and "The Baptism of the

Great Niagara Tunnel." The last-named paper was published in the Proceedings of The Engineers' Club of Philadelphia, April and June, 1894.

Mr. Geyelin married Miss Lanssat, only child of Anthony Lanssat, of Philadelphia, and granddaughter of Anthony Laussat, the last Prefect of Louisiana, who acted as Commissioner when that State was transferred from the French to the United States government. Mr. Geyelin is survived by his widow and by his son, Henry Laussat Geyelin, an attorney of this city.

With the courtesy of a French gentleman of the old school Mr. Geyelin combined a simplicity and modesty of demeanor which, while it endeared him to all with whom he came into personal contact, forbade him to assume that outward prominence to which his abilities and his achievements so richly entitled him.

EDWIN F. SMITH,
FRANCIS SCHUMANN,
JOHN C. TRAUTWINE, JR.,
Committee.

ABSTRACT OF MINUTES OF THE CLUB.

REGULAR MEETING, November 17, 1900.—The President in the chair. Sixty-seven members and eight visitors present.

The death of Thomas P. Lonsdale was announced.

Dr. Joseph T. Rothrock read a paper on "Pennsylvania Forests and What is Necessary to Restore Them." The subject was discussed by Messrs. Birkinbine, Marburg, Codman, Schermerhorn, Maignen, and Trautwine.

BUSINESS MEETING, December 1, 1900.—The President in the chair. Sixty-eight members and six visitors present.

Nominations for officers were presented as follows :

For President :	*Proposed by :*	*Seconded by :*
HENRY LEFFMANN.	James Christie. Carl Hering.	Jos. T. Richards. Wm. R. Webster.
For Vice-President :		
EDWIN F. SMITH.	John C. Trautwine, Jr.	Carl Hering.
For Secretary :		
L. F. RONDINELLA.	W. B. Riegner.	H. C. Felton.
For Treasurer :		
GEO. T. GWILLIAM.	Minford Levis.	W. Devereux.
For Directors :		
SILAS G. COMFORT.	Henry Leffmann.	Edward K. Landis.
MINFORD LEVIS.	L. Y. Schermerhorn.	Geo. S. Webster.
W. B. RIEGNER.	Wm. C. L. Eglin.	Josiah Dow.
HARRISON SOUDER.	John Birkinbine.	H. V. B. Osbourn.

The Committee on Nominations was named as follows : L. Y. Schermerhorn (Chairman), John C. Trautwine, Jr., Geo. S. Webster, John E. Codman, and Prof. Walter L. Webb.

Mr. James Christie read a paper upon "High-speed Toothed Gearing." Mr. Wilfred Lewis read a paper on "Interchangeable Gearing." The subject was discussed by Messrs. Graves, Rondinella, Christie, Hering, Eglin, and Trinks.

The Tellers reported the election of Samuel S. Sadtler and F. H. Shelton to active membership.

ANNIVERSARY MEETING, December 15, 1900, held at the New Century Drawing Room, 124 South Twelfth Street. Eighty-six members and one hundred and seventy-three visitors present.

No regular business was transacted.

The President read a sketch of the history of the Club, from its foundation to the present time.

Mr. Carl Hering delivered an illustrated lecture on "The Popular Features of the Paris Exposition."

At the close of the exercises an informal reception with refreshments and music was given.

ABSTRACT OF MINUTES OF THE BOARD OF DIRECTORS.

SPECIAL MEETING, October 27, 1900.—No quorum.

SPECIAL MEETING, November 3, 1900.—Present: The President, the Vice-Presidents, Directors Levis and Christie, the Secretary, and the Treasurer.

The meeting was called to consider the arrangements for the celebration of the Twenty-third Anniversary.

SPECIAL MEETING, November 10, 1900.—Present: The President, the Vice-Presidents, Directors Levis, Souder, Christie, and Piez, the Secretary, and the Treasurer.

The meeting was called for consideration of the celebration of the Anniversary.

REGULAR MEETING, November 17, 1900.—Present: The President, the Vice-Presidents, Directors Levis, Souder, and Smith, the Secretary, and the Treasurer.

The Treasurer's report showed:

Balance on hand, September 30, 1900,	$279.50
Receipts in October,	521.40
	$800.90
Disbursements in October,	555.13
Balance, October 31, 1900,	$245.77

The death of Thomas P. Lonsdale was announced.

The resignation of Wm. Penn Evans as Director was accepted.

The House Committee made a report in regard to the cost of furnishing electric lighting for a portion of the Club-house.

A Special Committee on Club Anniversary made a preliminary report.

SPECIAL MEETING, December 1, 1900.—Present: The President, the Vice-Presidents, Directors Levis, Souder, and Christie, the Secretary, and the Treasurer.

The Committee on Anniversary presented a final report.

REGULAR MEETING, December 15, 1900.—Present: The President, the Vice-Presidents, Directors Levis, Souder, and Smith, the Secretary, and the Treasurer.

The Treasurer's report showed:

Balance on hand, October 31, 1900,	$245.77
November receipts,	256.25
Transferred from 3% account,	300.00
	$802.02
November disbursements,	232.54
Balance, November 30, 1900,	$569.48

Resignations were accepted as follows:

From Active Membership: F. J. Firth, A. Hale, G. Mordecai, F. V. Matton, Thomas Spencer, W. M. Stine, A. B. Stovell, C. A. Merriam, and F. Uhlenhaut, Jr.

From Associate Membership: S. C. Dinsmore, F. C. Kohl, and B. F. Stradley.

ADDITIONS TO GENERAL LIBRARY.

From J. J. L. Houston, Philadelphia.

Railway Economy in Europe and America, Dionysius Lardner, 1850. Civil Engineering, John Millington, 1839.

From Ernest McCullough, Lewiston, Idaho.

Municipal Public Works Manual, 1900.

From James Christie, Philadelphia.

Talbot's Open-hearth Continuous Steel Process, 1900.

From American Philosophical Society.

Proceedings, Vol. XXXIX, No. 163.

From American Soc. Mechanical Engineers.

Transactions, Vol. XXI, 1900, unbound.

From Chas. H. Rust, City Engineer, Toronto, Canada.

Annual Report, 1899.

From Wagner Free Inst. of Science.

Transactions, Vol. III, Part 5, December, 1900.

From J. C. Smock, State Geologist, Trenton, N. J.

Annual Report, 1899 (Forests), with maps.

From New York Academy of Sciences.

Memoirs, Vol. II, Part 2, 1900. Annals, Vol. XIII, Part 1.

From Prof. J. C. Branner, Stanford University, Cal.

The Manganese Deposits of Bahia and Minas, Brazil. Oil-bearing Shales of the Coast of Brazil. Proceedings, Washington Acad. of Sciences, Vol. II, pp. 185–201. Bulletin U. S. Geological Survey, No. 143. The Origin of Beach Cusps. Ants as Geologic Agents in the Tropics. Observations upon Erosion in Hydrographic Basin of Arkansas River above Little Rock. The former Extension of the Appalachians across Mississippi, Louisiana, and Texas. Thickness of Ice in Northeastern Pennsylvania during the Glacial Epoch. Geology in Its Relations to Topography. Phosphate Deposits of Arkansas. Bauxite Deposits of Arkansas.

From State Board of Health of Massachusetts.

Thirty-first Annual Report, 1899.

From L. C. Ferrell, Supt. of Documents, Washington, D. C.

Special Consular Reports, Vol. XVI, Supplement; Vol. XIX; Vol. XX, part 1; Vol. XX, part 2; Vol. XX, part 3; Vol. XXI, part 1; Vol. XXI, part 2; No. 239. Exports Declared for U. S., fiscal year 1899. Exports Declared for U. S., quarter ended June 30, 1900. Consular Reports, No. 241. Arizona, Report of Governor, 1899. Preliminary report of Reservoir sites in Wyoming and Colorado. Five Civilized Tribes, Sixth Annual Report of the Commission, 1899. Foreign Commerce and Navigation, Vol. I. Foreign Commerce and Navigation, Vol. II.

From Institution of Civil Engineers, London.

Abstracts, Vol. CXLII, 1899–1900, part 4.

From U. S. Geological Survey, Washington, D. C.

Twentieth Annual Report, 1898–1899, parts 2, 3, 4, 5, 7. Map of Alaska, Showing Known Gold-bearing Rocks. Preliminary Report on Cape Nome Gold Region.

From Charles Warren Hunt, Sec'y., Am. Soc. Civil Engineers.

Catalogue of Library, June, 1900.

From Emil L. Nuebling, Reading, Pa.

Thirty-fifth Annual Report, Board of Water Commissioners, 1899–1900.

From University of California, Berkeley, Cal.

University Chronicle, Vol. III, No. 5, November, 1900.

From Public Library, City of Boston.

Annual List of New Books, 1899–1900.

From G. Eiffel, Paris, France.

Scientific Work on the Tower of 300 Meters, 1899–1900.

From Society of Civil Engineers of France.

Reception to Delegates, 1900.

From Geographical Society, Phila.

Bulletin, December, 1900.

Periodicals Recently Bound and Added to the Library.

Engineering News, Vol. IX, 1882; Vol. XI, 1884; Vols. XIII and XIV, 1885; Vols. XXVII and XXVIII, 1892; Vol. XXIX, 1893; Vols. XXXIII and XXXIV, 1895; Vols. XXXV and XXXVI, 1896; Vol. XXXIX, 1898; Vol. XL, 1898; Vol. XLI, 1899; Vol. XLII, 1899. Electrical World, Vols. XIX to XXII, 1892–1893; Vols. XXVI to XXXIII, 1895–1899. Engineering Record, Vols. XXXVII to XL, 1898–1899. Am. Inst. Mechanical Engineers, Vols. XIX to XXI, 1897–1899. Am. Inst. Mining Engineers, Vols. XXVII to XXIX, 1897–1899. Journal of the Franklin Institute, Vol. LXIX, 1875; Vols. CV and CVI, 1878; Vol. CXVI, 1883. Am. Society of Civil Engineers, Vols. XX and XXI, 1889; Vols. XXXIX to XLIII, 1898–1900. Association of Engineering Societies, Vol. XX, 1898; Vol. XXII, 1899.

THE ENGINEERS' CLUB OF PHILADELPHIA,

House, No. 1122 Girard Street,

PHILADELPHIA, PA.

ANNUAL REPORT OF THE BOARD OF DIRECTORS

FOR THE FISCAL YEAR 1900

JANUARY 5, 1901.

TO THE ENGINEERS' CLUB OF PHILADELPHIA :

In compliance with the requirements of the By-Laws, the Board of Directors offers the following report for the year ending December 31, 1900.

Eighteen regular meetings of the Club were held, at which the maximum attendance was 92, and the average about 70. Nine stated and three special meetings of the Board of Directors were held, at all of which a quorum was present.

One honorary, 20 active, 4 associate, and 9 junior members were elected ; 13 active and 4 associate members resigned ; and 7 active members and 1 associate member were dropped from the rolls.

The record of death is as follows :

Emile Geyelin, Active Member, died June 25, 1900.
J. Simpson Africa, Active Member, died August 8, 1900.
Thos. P. Lonsdale, Active Member, died November 9, 1900.
James S. Doran, Active Member, died December 17, 1900.

The membership of the Club on December 31, 1900, as compared with the previous year, was as follows :

	1899.			1900.		
Class.	*Resident.*	*Non-Resident.*	*Total.*	*Resident.*	*Non-Resident.*	*Total.*
Honorary.....		1	1	1	1	2
Active..... ...	283	115	398	280	121	401
Associate.....	19	1	20	18	1	19
Junior...	12	5	17	15	4	19
	314	122	436	314	127	441

Eight hundred and eighty-three books were labeled and entered on the card index. The filing-case installed in the reading room has been a great convenience. Forty-seven volumes of transactions and journals have been bound, but this work has been delayed by the difficulty of securing missing numbers.

The following papers have been presented:

JANUARY 6TH.—Biographical Sketches of the Professional Careers of William Hasell Wilson and Herman Haupt. William B. Wilson.

JANUARY 20TH.—Address of Retiring President. Esthetics and the American Engineer. Francis Schumann.

FEBRUARY 3D.—The Utilization of Bacteria and Bacteriologic Methods in Modern Sanitary Engineering. A. C. Abbott.

FEBRUARY 17TH.—Informal Talk on Tree Trunks as Bench-Marks. Henry Leffmann.

MARCH 3D.—The Canadian Pacific Railway from Laggan to Revelstoke, British Columbia. William S. Vaux, Jr.

MARCH 17TH.—The General Chemical Aspects of the Corrosion of Structural Metals and the Principles involved in their Protection. A. H. Sabin, New York.

APRIL 7TH.—The Drainage and Protection of the Philadelphia Lowlands. Harrison Souder.

APRIL 21ST.—Coal-tar and Coal-tar Products. Henry Leffmann. Informal Talk on the Recent Failure of the Austin Dam. H. M. Chance.

MAY 5TH.—Modern Methods of Manufacturing Illuminating Gas; with a Description of its Distribution under High Pressure. Frederick H. Shelton.

MAY 19TH.—The Bacterial Treatment of Sewage in England. William Easby.

JUNE 2D.—Pumping Engines of the Philadelphia Waterworks. Henry G. Morris.

SEPTEMBER 15TH.—The Water-jet as an Aid to Engineering Construction. L. Y. Schermerhorn.

OCTOBER 6TH.—Transmission of Gas and Air through Pipes, and the Transmission of Power by Compressed Air. Frederick W. Gordon.

OCTOBER 20TH.—The Strength of the Ideal Column and its Relation to the Safe Load on a Practical Column; Some New Formulas and their Comparison with Older Ones. Carl G. Barth.

NOVEMBER 3D.—Topical Discussion on American Isthmian Canals. James Christie, Edwin F. Smith, and L. Y. Schermerhorn.

NOVEMBER 17TH.—Pennsylvania Forests and What is Necessary to their Restoration. J. T. Rothrock.

DECEMBER 1ST.—High-speed Toothed Gearing. James Christie. Interchangeable Gearing. Wilfred Lewis.

DECEMBER 15TH.—Celebration of the Twenty-third Anniversary of the Foundation of the Club, held at New Century Drawing Room. A Brief History of the Club. Edgar Marburg. Popular Features of the Paris Exposition. Carl Hering.

Four numbers of the Proceedings were issued, comprising volume XVII. An exact statement of the cost of publication can not be made, as some items belong in part to other volumes and other accounts, but the following is a close approximation :

Printing	$556 73	
Copyright and office expenses	40 94	
Wrappers and stationery	16 00	
Illustrations	148 18	
Reprints	15 25	
Reporting discussions	103 90	$881 00
Net earnings for advertisements, all of which will be paid	356 00	
Sales of volume XVII	20 00	376 00
Net cost		$505 00
Additional sales of numbers of Proceedings issued prior to 1900	$68 80	

Expenditures for 1899 and 1900.

	1899.	1900.
House	$2872 96	$2876 76
Proceedings	1352 85	1131 17
Library	74 79	516 32
Information	99 68	104 70
Office	577 70	497 37
Salaries	1073 89	1080 00
	$6051 87	$6206 32

In these statements the gross expenditures are shown, but for a proper expression of the actual outlay for 1900, receipts should be deducted as follows :

House	$ 57 48,	leaving net expenses $2819 28
Publication	598 30,	" " " 532 87

In the library account, the expenses for reference library and filing-case incurred during 1899, are included; also $76.00 subscriptions to reference library. The deductions for these items are $461.35, leaving net outlay for 1900, $54.97, to which should be added bills payable $48.75, making a total of $103.72.

Assets and Liabilities, December 31, 1900.

Assets.

Furniture and fixtures, as per appraisement February 17, 1900	$1707 60	
Furniture added during 1900	50 00	
Library, as per appraisement December 31, 1900	2100 00	
Total furniture and library		$3857 60
U. S. Bond, issue of 1898 (par $500), market value		550 00
On deposit, bearing interest at three per cent.		500 00
" " " " " two " (less dues for 1901, $527.59)		55 76
		$4963 36

Liabilities.

Unpaid bills (House, $2.00; Library, $48.75)	$50 75
Excess of assets over liabilities	$4912 61

Respectfully submitted,

Edgar Marburg, *President.*
L. F. Rondinella, *Secretary.*

Report of the Treasurer for the Fiscal Year 1900.

Receipts.

Initiation fees (33)	$165 00	
1899 dues	155 00	
1900 dues	4462 50	
1901 dues	527 59	
		$5310 09
Proceedings (advertisements)	509 50	
Proceedings (sales)	88 80	
		598 30
Interest on deposits		31 64
Interest on investment		15 00
Keys (sold)		4 75
Slides (sold)		3 45
Telephone		4 95
Billiards		49 08
Library		76 00
Total receipts		$6093 26
Cash balance, Dec. 31, 1899		1196 41
		$7289 67

Expenditures.

Salaries:		
Secretary	$240 00	
Treasurer	60 00	
Clerk	780 00	
Janitor	547 50	
		$1627 50
House:		
Rent	$1100 00	
Coal	106 50	
Gas	69 30	
Ice	27 65	
Supplies and repairs	227 43	
Telephone	124 08	
		$1654 96
Office expenses		487 37
Proceedings		1131 17
Information committee		75 95
Library		516 32
Luncheons		637 10
Billiards		8 45
Dues refunded (1900)		10 00
Anniversary committee		57 50
Total disbursements		$6206 32
CASH BALANCE, DEC. 31, 1900,		**1083 35**
		$7289 67

Respectfully submitted,

Geo. T. Gwilliam, *Treasurer.*

We have examined the books and accounts of the Treasurer, compared them with the original vouchers, checks, and bank-book, and find them to correspond with the Treasurer's statement submitted above.

W. P. Dallett,
H. W. Spangler,
Rich'd L. Humphrey, } *Auditors.*

Editors of other technical journals are invited to reprint articles from this journal, provided due credit be given the PROCEEDINGS.

PROCEEDINGS

OF

THE ENGINEERS' CLUB

OF PHILADELPHIA.

ORGANIZED DECEMBER 17, 1877. INCORPORATED JUNE 9, 1892.

NOTE.—The Club, as a body, is not responsible for the statements and opinions advanced in its publications.

Vol. XVIII. APRIL, 1901. No. 2.

PENNSYLVANIA FORESTS AND WHAT IS NECESSARY TO THEIR RESTORATION.

JOSEPH T. ROTHROCK.

Read November 17, 1900.

FORESTRY is a business. Sentiment has in it properly but a secondary place. If it can not be made to pay, it is too costly to be indulged in as a luxury; but, looked at from this standpoint, we often make the mistake of supposing that timber is the only product of forestry and the only element which enters into the decision of the question as to whether or not forestry pays. The forestry interest has its by-products, and these are often more important, in their bearing upon our industries, than the chief product. I propose to consider the subject under the following heads:

First, forests as they were in Pennsylvania.

Second, forests as they are in Pennsylvania.

Third, forests as they ought to be in Pennsylvania.

Fourth, what is necessary to bring about the desired condition of our Pennsylvania forests.

Pennsylvania originally was one of the best-timbered States along the Atlantic seaboard. So far as I am informed, there were but few areas of any size upon which a dense growth of timber did not exist. Here and there a beaver dam can still be found, or, at least, its

remains traced. Occasionally an extensive bog existed, which may have owed its origin to an old or recent cause. In the event of its being recently formed, it was bare of trees. If of earlier origin, as in the case of the Tamarack swamp in Clinton County, it was covered with trees, which were usually of a northern type. But, considered as a whole, Pennsylvania was a forested area; there were but few barrens or prairies, and if any existed, they were of small area. But very few of our most important trees were distinctly localized. Most of them to a greater or less extent were found in almost every portion of the State. But, on the other hand, there were several regions which were specially characterized by the size and abundance of particular species. For example, we may say that the most striking features of the forests in the southeastern part of the State were the white oak, the hickories, the chestnut, the black walnut, the tulip poplar, and the swamp maple.

These gave the earliest and most lasting impression to an observer. Associated with them, but less prominent, were various other species —the beech, the black and scarlet oaks, and the yellow pine. Even the white pine, which was found in its greatest abundance in the central, mountainous portions of the State, occurred in a sporadic manner in the southeastern portion. The sugar maple, the beech, the black and yellow birch, which are now found most abundantly in the northern and central counties of the Commonwealth, were nevertheless also represented in the southeastern portion. On the other hand, taking the higher central axis of the Commonwealth, which cuts diagonally across the State, the prevailing trees were white pine and hemlock; the latter being more common in the northeastern half of the higher portion of the State, while the white pine, though not wholly excluded from the northeastern portion, constituted the chief source of forest wealth in Lycoming, Tioga, Potter, McKean, Warren, Forest, Elk, Cameron, Clearfield, Jefferson, Indiana, Cambria, and Somerset Counties. The whole of this belt was practically one of high ground; and in spite of the erosion which has occurred, it is along this belt that the culminating points of the State are still found. The Elk Mountains of Susquehanna County, it is said, rose above the glacial mass. Ganoga Lake is about 2200 feet above tide, and in Somerset County, according to a recent survey, an altitude of nearly 3000 feet is found. Associated with the white pine and hemlock were the black and yellow

birch, the beech and sugar maple; and these gave, it may be said, a sort of secondary character to the forest. In regions where the white pine or the hemlock did not predominate, and where the ground was rocky and steep,—for example, on the dryer ridges,—the rock oak, locust, pitch pine, and chestnut prevailed. Once, however, the Allegheny River was passed, it was noted that the oaks predominated and the cone-bearing trees correspondingly decreased. There were in the southwestern portion of the State a few characteristic trees of the lower Ohio valley. The coffee tree, the Carolina poplar, the cucumber tree, and the honey locust were representatives of that group.

It is hard to estimate even approximately the quantity of timber which originally stood in the Pennsylvania forests. It would not, however, be excessive if I were to say that the hard woods averaged from 2500 to 3000 feet board measure per acre. The hemlock, in its region of best growth, would vary between 5000 and 30,000 feet to the acre, and the white pine often surpassed the hemlock. It is more than likely that we to-day underestimate the maximum size of the trees which were found in our forests at that time. A diameter of six feet at four feet above the base for white oak and white pine was probably not unusual. The chestnut attained to even a greater diameter, and hemlocks of five feet in diameter were by no means rare. Such was probably the condition of the Pennsylvania forests as seen by the earliest settlers. Two causes have been at work in their removal: First, the necessity for clearing the ground to open up farms; and, second, the lumbering industry. It is safe to say that the most prosperous period of the lumbering industry and also the most depressed period have been within the memory of men still living. It is just one hundred and eight years since the first saw-mill was built in Lycoming County. And it may truthfully be said that this was the beginning of the end of our Pennsylvania forest. The task to which the various lumbermen of the period addressed themselves with an activity that had been previously unexampled was supplying, from Pennsylvania, the largest market which they could find for their lumber. If the most conservative methods of removing the timber had been followed, it would still have been merely a question of time before the present scarcity of timber in this State would have been reached, from the simple reason that no one dreamed of the possibility or necessity of forest restoration. Men did not know, and

would not have cared if they had known, that they were removing timber faster then it was being produced. But in addition to these excessive drains upon our forests, fires were allowed annually to do their worst over the whole of the area from which the lumber had been cut. Men neither noted nor heeded the fact that all of the second growth, nature's spontaneous offering, by means of which the forests would have been restored in time, was so completely destroyed. In most instances it was so badly injured that its maturity was indefinitely postponed and its value seriously impaired.

We may now consider our second head:

Forests as They Are in Pennsylvania.

I do not know that I can make a more pointed statement of the actual condition of our forests than to say the white pine has always been regarded as the most desirable lumber in our Pennsylvania forests, and that hemlock never became a lumber of recognized value until white pine became scarce. In 1875 there reached Williamsport 190,783,220 feet of pine and hardwood. That same year there reached Williamsport 19,963,736 feet of hemlock. In 1894 there reached Williamsport 8,928,204 feet of pine and hardwood. The same year there reached Williamsport 30,739,404 feet of hemlock. In other words, in 1875 the pine and hardwood reaching Williamsport was about nine and a half times as great as the quantity of hemlock. But in 1894 the quantity of hemlock reaching Williamsport was about three and a half times as great as the quantity of pine and hardwood. In the early history of Cincinnati, Pennsylvania sent white pine there to enter into the construction of buildings. In 1900 Pennsylvania brings white pine from Michigan and Minnesota for her own use. In 1855 the white pine forest of Pennsylvania, extending over the counties of Lycoming, Tioga, Potter, McKean, Warren, Forest, Jefferson, Clearfield, and Somerset, was reckoned as inexhaustible. But to-day in those same regions they are roofing their houses with shingles from Oregon and weatherboarding them with poplar siding from Tennessee. It is doubtful whether one of our old-time frigates or a Cope-liner could now be built from timber found in this State within a radius of thirty miles from the city of Philadelphia. Mature black walnut is to-day almost exterminated in the eastern half of the State. Our railroads in this State, after exhausting

the white oak and rock oak, were constrained, many of them, to use chestnut for cross-ties. Now they are bringing in for this purpose yellow pine from the Southern States. The smaller tanneries of the State have been obliged to suspend operations because of the pressure from the great tanning trusts; and one after another the plants of these trusts themselves are now being abandoned from lack of bark to operate upon; as, for example, Ledgedale and Proctor; and it is but a question of a few years before the majority of them will be obliged to suspend operations or seek their supplies in some other region. Of the vast body of white pine which existed in this State in 1860, but two areas of considerable size now remain. I believe I will be justified in saying that all of the really good white pine in Pennsylvania could easily be reduced to lumber by two of our largest mills within a single year. There are regions, notably along Kettle Creek, where considerable bodies of mature hemlock can still be found. In spite, however, of the apparently large body of timber, no one who is conversant with the facts will be deceived; because what remains to be exterminated is but a fraction of what has already been destroyed. It may seem strange to you, gentlemen of The Engineers' Club, that I should deal in these general statements, instead of in figures. But I do so designedly. After more than twenty years' experience in the forestry work, I have reached at last a profound distrust of timber statistics as they have been presented. I have seen thousands of acres in this State pass through the successive stages of lumbering. First the white pine, then the hemlock, then the mine-prop timber, then the wood acid factory and pulp mill, and lastly the stage of tanning extract. I have seen regions containing yellow pine of but 2000 feet to the acre, which had been rejected as worthless by those who had previously removed the white pine and the hemlock, come to be regarded as heavily timbered, and so offered in the market. Gentlemen, there is but one conclusion to draw from these statements; to me they are far more significant than columns of figures. And I have a profound distrust of the statements recently made that there still exists in this State 34 per cent. of our area which is in mature or growing timber. I believe that there is not 20 per cent. of the area of this State now covered with timber which has now, or ever will have, commercial value. It is very easy to see how one may be misled upon this ques-

tion, by considering as timber that which ought to be classed as simply brush. And this brings me to the third head:

Forests as They Ought to be in Pennsylvania.

The function of every acre in this State is to produce its best crop. What that best crop shall be depends very largely upon market conditions. Much of the ground which is now cultivated does not pay the farmer for his labor when wheat is at sixty cents a bushel, though it might have been deemed satisfactory agricultural land when wheat could be sold for a dollar or more a bushel. Under existing conditions it would be worth more to the owner with the original forest remaining upon it. But, unfortunately, one is unable to predict how long the relative values of wheat and lumber will remain as they now are. On the other hand, it is entirely safe to say, if we leave the owner out of the question and consider only the public interest, what lands should be maintained in timber; because there are so many other interests than those of agriculture and lumbering to be considered. There are slopes so steep that they should be maintained perpetually in timber, without regard to the agricultural interests. There are drainage areas which, from their water-collecting power, should be kept in a forested condition in order to supply our cities and towns. There are outing grounds for our citizens which should be maintained as such in the interest of public health. There are mountain districts, now almost valueless, which, as water-power comes to be more highly appreciated, will become manufacturing centers, and where this water-power can be maintained in even flow only by retaining the forests about the head-waters of the streams. There are vast districts so poor by nature and so impoverished by frequent fire that nothing but State control can render them capable, under existing laws, of producing anything but timber. All these facts have to be considered. And I am quite sure that when we come to consider all these elements of the problem we would be justified in the statement that at least one-sixth of the area of this State should be given over to forests. There is another element of the problem which I have hesitated to allude to: I mean the question of pure air. It is a perfectly well-known fact that the greatest oxygen producer of which we have any knowledge is the forest. The tendency of animal life, of manufacturing establishments, and of many other things, is to render the atmosphere impure;

but in spite of these known facts one may well halt before assuming that this should be made an argument in favor of forest maintenance. When, however, so distinguished an authority as Lord Kelvin raises the question as to whether we are not permanently injuring the atmosphere, one must give the problem a measure of attention. There is another feature to which I cannot close my eyes. My recollection extends back almost half a century. During all this time I have had in a greater or less degree the condition of agriculture brought to my notice. I will not here raise the question of rainfall, or the rate of run-off from our streams. But I cannot remember in my earlier life a period when for several successive years our autumn crops have been so seriously endangered as recently by a prolonged drought at the time when moisture was most needed. The thought of irrigation as a measure of safety for our crops never entered the minds of our farmers twenty years ago. It is now agitated more and more with each recurring season. As I travel through the State and note the low condition of our streams, I find that the areas which should be covered with water, and be therefore evaporating areas, are seriously reduced during the late summer and autumn. All additional dryness of the atmosphere must be compensated for if possible from some source; and from every foot of open ground, the ground upon which our crops are raised, the thirsty atmosphere vaporizes and carries off the water. I do not believe that this phase of the problem has ever received the attention which it merits. I am convinced that unless by some means the even flow of water in our streams is maintained, our agricultural interests will be seriously injured. And I need not remind you that of all the helpful forces which we can control to accomplish this, there is nothing so potent as a proper proportion of forest land. These, however, are some of the side issues of this problem.

I think I may safely assume that this audience recognizes the importance of the necessity for forest restoration. The remaining question is, What is necessary to bring about the desired condition?

First of all, we may assume that it could be brought about; that there is no inherent impossibility in it, and that the work could be made to pay the State, and, apropos of this remark, allow me here to introduce a quotation from "Some Business Problems of American Forestry," by Dr. Schenck, page 25. What follows, relates to the State of Pennsylvania:

"*Premises:*—The State of Pennsylvania decides to engage in State forestry, and to that end takes up a loan of $1,450,000, at 4 per cent., which is to be used as follows:

"$1,000,000, for purchase of 1,000,000 acres at the head-waters of the rivers; $50,000 for lawyer's fees, surveys, demarcation, etc.; $150,000 for roads, etc.; $250,000 for defraying the annual salaries of superintendents and rangers.

"After the road system is developed, twelve years from to-day, an annual revenue of 10 cents per acre per annum will be derived, under conservative management, and it is expected that this revenue will gradually increase at the rate of 3 per cent. per annum.

"*Question:* (*a*) Within how many years will the forest itself be able to redeem the loan?

"(*b*) What is the forest worth after the loan is redeemed?

"*Result:* (*a*) The loan can be entirely redeemed within forty-three years after the twelfth year, or within fifty-five years from to-day.

"(*b*) The forest, freed from all incumbrances after fifty-five years, and producing annually $356,000, with prospect of an annual increase of revenue equaling 3 per cent., is worth about $35,600,000."

If the people are ready to spend $58,000 for twelve years, they will gradually build up a valuable forest.

As a statement, this is very encouraging. But practically the thing cannot be done in Pennsylvania, because there are constitutional reasons against the proposed loan, and these cannot be set aside. Fortunately indeed for this State, the same results can be accomplished just as certainly, and almost as speedily, without a loan; and with the aid of very little legislation. The truth has so often been stated that I hesitate to reiterate it here now. The one obstacle, in fact, the only obstacle, to a spontaneous restoration of our forests in this State is the prevalence of forest fires. There are some truths so familiar that their re-statement becomes nauseating, both to speaker and hearers; but, like the truths of the gospel, they must be repeated; and for the hundredth time in this city I again affirm that if the timberless, rocky highlands of the State be effectually protected against fire, in thirty years the forestry problem in this State would be solved. And in this connection allow me to say that very little additional legislation is necessary for the accomplishment of the desired results.

In spite of all the objection that has been made to the existing fire

laws of the State, the fact is that wherever they have been fairly enforced they have done their work. And I make the statement here today, without fear of successful contradiction, that the parties who are responsible for much of the loss of property by annual forest fires are the county officials, who have failed to use judiciously the legal remedies which the law has provided. The chief objections to the existing laws are that they are new, that their execution requires some work and involves some expense (which the State shares), and that the officials who enforced them may lose some votes. Our public-school system was condemned when it was new. Nothing good or desirable can be had without expense; and the official who refuses the duty which he has sworn to perform is unworthy of any office. If these laws are bad, enforce them. It is the surest way to repeal them. If they are good, enforce them. It is the surest way to find their value.

There are counties in this State where the destruction of timber property aggregates thousands of dollars a year, where annual forest fires are cursing the county with an ever-increasing barrenness, and where, in the same counties, the officials refuse to pay the constables well-earned fees for suppression of forest fires, or refuse to appropriate a penny of money to bring to justice those who have robbed their constituents of property which the county demanded and received money for protecting. No language can be too strong to depict the injustice, the illegality, and the criminality of such a policy. In the year 1899 sixty-eight fires were reported to this office, to the Commissioner of Forestry, and the causes definitely stated. In forty-seven instances the fire originated with farmers who were burning brush, and there were twenty-one cases from all other causes. It is absurd to say that those who created the great majority of these fires could not have been apprehended and punished. For in most instances the cause and point of origin were widely known to the community. Some of the instances were notorious, and awakened public condemnation. And yet I know of but a single instance where in that year an offender was brought to justice. Is it any marvel that ignorant or vicious or careless people year after year prevent the restoration of timber in this State? Is it any wonder that public-spirited citizens decline to plant trees which they know will be destroyed?

This state of affairs is about as bad as it well could be. So far as I know, there is but one thing which could be worse; and that is to

allow it to continue when it can be so easily prevented. I believe that any honest, intelligent official of this State, who is charged with the duty of attending to it, in five years could break up the whole of this system of spring and autumn forest fires; provided he were allowed, by appropriation, a sufficient sum to employ ten honest, determined, capable detectives, and the means to employ proper legal talent when the criminals were arraigned. It is the common custom to charge most of the losses by forest fire upon the railroads of the Commonwealth; and while it is true that they do create more fires than they ought to, and are culpably negligent, very often, as to the conditions of their locomotives, they do not cause the majority of our forest fires. The destructive season of 1900 fully confirms all that I have stated of 1899. I have taken the trouble, individually, to trace a considerable number of these fires to their origins, and they simply repeat the story of the previous year. In the sweeping condemnation that I have made I desire here especially to name three counties in which efforts have been sincerely made to bring the criminals to justice, and in which success has crowned the effort. I allude to Lycoming, Perry, and Somerset Counties; and I desire here to express my gratitude to the officials of those counties for their hearty cooperation. In doing this, I do not mean to imply that all the other counties of the Commonwealth have failed utterly to do their work, for this would not be true. I can simply say that no others have done it so well as the counties I have named.

Turning from this aspect of the question, let us for a moment consider the State Forestry Reservations, the work that is supposed to be accomplished by them, and how it is hoped to do it. It is safe to assume that in the near future the State of Pennsylvania will be in possession of 300,000 acres of land which is either in forest or will become forest land. This, however, is but a mere fragment of what it should possess. But it is enough to induce the most serious thought as to what is to be done with it. In other words, the State of Pennsylvania has reached a time when it must for itself establish a well-defined forest policy. This policy should be well considered by capable men. And when once decided upon, it should not be changed every four years. It would be as destructive to the forestry interest to do this as it would of the educational interest of the State if a new policy were to be inaugurated with each new administration. Change

the officials if you must, but allow a well-matured plan to be worked to a successful issue. I may be allowed to say that the officials who are now charged with this duty are considering, first, what is absolutely the best plan; and, second, what is the most available plan of commencing the work of forest restoration upon the ground now in possession of the State. For you must bear in mind that the best thing cannot always be done. The Legislature will probably be asked to make provision for the maintenance of a reasonable number of forest rangers, who should at the same time that they are protecting the ground against intruders, suppressing forest fires, and bringing to justice those who create them, be on the lookout for those who are violating the game, fish, and health laws, and making special note with regard to the capabilities of the soil for restoration of special kinds of timber and the best method of producing it. For the present, the chief forestry officer of the State should make it his duty to be thoroughly familiar with all the ground possessed by the State, and he should have authority to open up and keep up such fire lanes as in his judgment will enable his employees most successfully to prevent the spread of destructive fires. Means should be furnished also for the creation of local nurseries in the immediate vicinity of the points where the young trees are needed. In due time it will be necessary to remove, as it matures, or for other reasons, timber which has become marketable. And this work should not be done after the destructive fashion of the American wood-chopper. No doubt he would be the most efficient agent under proper direction, and this direction should be provided for him. There are certain trees which, so to speak, should have the right of way, wherever conditions of soil are suitable. Such, for example, are the white pine, the white oak, the chestnut, the locust, and, I am now commencing to believe, the shell-bark hickory and the walnut.

Two new claimants for our favor are under trial The Carolina poplar is a hardy, rapid grower which can be utilized in the production of wood pulp. I have a firm faith in its future over a large portion of our State.

From time to time we have heard and continue to hear the most astounding statements concerning the value of the western catalpa. We have a reasonable certainty that it can be made to produce good fence-posts, that it is a rapid grower, and a hardy tree. But I am bound to

confess, in spite of the assertions that it will make a good railroad tie, that I do not believe it. In every instance that I have traced popular rumor to its source, the fitness of the western catalpa for railroad ties has been rendered more and more doubtful. All rumors to the contrary notwithstanding, I do not know a single instance in which large bodies of western catalpa have been grown to a merchantable size or a single case in which the mature western catalpa has had a fair trial as a railroad tie. I am perfectly free to confess that I do not believe its light structure would ever successfully enable it to stand the crushing weight of heavy railroad trains, though I do believe, so far as mere durability is concerned, that it lasts well in contact with the soil.

What I have said thus far refers especially to the production of timber on State lands. There is another aspect of the forestry problem which merits some consideration. I mean the art of forestry as related to individual enterprise.

Naturally, the State holdings of land would be on a higher and more barren portion of the Commonwealth, where larger areas can be had; if, however, this were the only aspect of forestry, it is very clear that a large portion of the State would be deprived of the benefits growing out of the immediate presence of considerable sized bodies of timber land. Our extreme eastern and extreme western portions of the State, in fact, all of the more fertile portions of the Commonwealth, have areas which are unfit for agriculture which belong to private parties, and which could most advantageously be placed in timber if equitable conditions existed. Before this can be done, however, it is absolutely indispensable that the State shall in some way, either by rebate of taxes or by direct bounty, place a premium upon production of timber. Or, rather, it would have been better to have said that it make operative laws which are already on the statute-books.

The Ziba T. Moore law, approved May 25, 1897, reads as follows:

"AN ACT

"For the Preservation of Forests and Partially Relieving "Forest Lands from Taxation.

"Section 1. Be it enacted, &c., That in consideration of the public benefit to be derived from the retention of forest or timber trees, the owner or owners of land in this Commonwealth, having on it forest or timber trees of not less than fifty trees to the acre, and each of said trees to measure at least eight inches in diameter at a height of six feet above the surface of the ground, with no portion

of the said land absolutely cleared of the said trees, shall, on making due proof thereof, be entitled to receive annually from the commissioners of their respective counties during the period that the said trees are maintained in sound condition upon the said land, a sum equal to eighty per centum of all taxes assessed and paid upon the said land, or so much of the said eighty per centum as shall not exceed the sum of forty-five cents per acre: *Provided*, however, That no one property owner shall be entitled to receive said sum on more than fifty acres.

"SECTION 2. All acts or parts of acts inconsistent herewith are hereby repealed."

This act, it will be clearly noted, applies to mature and maturing timber. I desire now to call your attention to another act, which was approved the first day of June, 1887:

"AN ACT

"FOR THE ENCOURAGEMENT OF FOREST CULTURE, AND PROVIDING "PENALTIES FOR THE INJURY AND DESTRUCTION OF FORESTS.

"SECTION 1. Be it enacted, &c., That in consideration of the public benefit to be derived from the planting and cultivation of forest or timber trees, the owner or owners of any land in this Commonwealth planted with forest or timber trees in number not less than twelve hundred to the acre, shall, on making due proof thereof, be entitled to receive annually from the commissioners of their respective counties, during the period that the said trees are maintained in sound condition upon the said land, the following sums of money:

"For the period of ten years after the land has been so planted a sum equal to ninety per centum of all the taxes annually assessed and paid upon the said land, or so much of the ninety per centum as shall not exceed the sum of forty-five cents per acre.

"For a second period of ten years, a sum equal to eighty per centum of the said taxes, or so much of the eighty per centum as shall not exceed the sum of forty cents per acre.

"For the third and final period of ten years, a sum equal to fifty per centum of the said taxes, or so much of the said fifty per centum as shall not exceed the sum of twenty-five cents per acre.

"*Provided*, That it shall be lawful for the owner or owners of the said land, after the same has been so planted for at least ten years, to thin out and reduce the number of trees growing thereon to not less than six hundred to the acre, so long as no portion of the said land shall be absolutely cleared of the said trees;

"*And provided also*, That the benefits of this act shall not be extended to nurserymen or others growing trees for sale for future planting.

"SECTION 2. The owner or owners of forest or timber land in this Commonwealth, which has been cleared of merchantable timber, who shall, within one*

* The law now allows notice to the commissioners at any time. The one year limitation has been repealed.

year after the said land has been so cleared, have given notice to the commissioners of their respective counties that the said land is to be maintained in timber, and who shall maintain upon the said land young forest or timber trees in sound condition, in numbers at least twelve hundred to the acre, shall, on making due proof thereof, be entitled to receive annually from the commissioners of their respective counties the sum of money mentioned in the first section of this act: *Provided*, That the first period of ten years shall be counted from the time that the said land has been cleared of merchantable timber, and that, after the said first period of ten years, the number of trees upon the said land may be reduced as in the first section is provided."

You will readily perceive that these two laws would, of themselves, be a sufficient inducement to many land-owners to either place or allow portions of their land to remain in timber, if they were enforced. Up to this time, however, there has been on the part of many county commissioners an attempt to evade the payment of these tax rebates. I think, however, that I am safe in the statement that we are now in the way of an enforcement of these laws. The farmers have at length come to realize that, on the one hand, they have the alternative of paying taxes on land from which they receive nothing, or, on the other hand, of securing a rebate of taxes which in ten years, on fifty acres of land, would amount to two hundred and twenty-five dollars; and having their timber still remaining to grow into a greater value with each successive year. Surely no man of ordinary business prudence would hesitate long between these alternatives.

It must not be assumed because the forestry movement has made such substantial gains in this State, in the last few years, that it has an uninterrupted progress before it. The best that can be said is, that it has grown sufficiently large to attract attention; and this, as you know, always invites attack. You may be very sure, however, that the ultimate issue is not in doubt. Sooner or later, and through greater or less tribulation and discouragement, the State of Pennsylvania will have an established and productive forest policy, in which the citizens of this Commonwealth will be hardly less interested than they are in their public-school system.

DISCUSSION.

JOHN BIRKINBINE.—Pennsylvania has an average rainfall of 43 inches: ranging from about 30 inches in unusually dry years to 62 inches in extraordinarily wet years. If we collect one-half of the average annual rainfall from drainage areas

in the State, the average daily supply would be above one million gallons from each square mile. This one million gallons is not the daily run-off, but represents what is obtainable from one square mile by impounding the water resulting from rains in reservoirs, and discharging this therefrom at a uniform rate.

In providing for a water-supply of from eighty to ninety million gallons a day from streams whose head-waters are at the crest of the Allegheny Mountains, the forestal conditions have received careful consideration, and I have had to base estimates of flow upon the presence or absence of forests. The rapid denudation of the timber, encouraging a rapid run-off from steep hillsides, has necessitated using as a basis for determining storage capacities required a minimum run-off of but 60,000 gallons a day, a square mile, while for carrying freshet water in enormous volumes the spillway areas were made most liberal. In late years engineers have been forced to reduce the formerly accepted ratings for minimum stream-flow in estimating storage capacities and increase the maximum controlling spillway dimensions to care for freshet flow.

I do not claim, nor would Dr. Rothrock, that forests make rain. We do, however, believe that forests conserve rain by the moss or forest floor, which holds water as a sponge, and prevents it from flowing off with great velocity. This forest floor catches the fine particles of dirt, as in a filter. In a wooded area you have this spongy floor and also protection from radiation ; therefore, the water which falls upon it will run off with less rapidity. If snow falls, it is protected, and all know that snow remains in the woods longer than outside.

Those interested in the forestry movement have, for a number of years, endeavored to educate public sentiment, and I would be delighted to see the majority of the members of The Engineers' Club active in the forestry movement. Engineers, as a rule, are progressive, and surely as good citizens we can look ahead and say we want the benefit not only for ourselves, but those who come after us. Forest protection conserves a very valuable product for construction—a product which we can form readily and with which a great many things can be cheaply and quickly accomplished. I do not expect railroads will always use wooden railroad ties. I have ridden over metal ties and believe the time will come when they will be very largely used. Nor need we go back to wooden buildings, but there are still thousands of uses for timber. Of all things the forestry problem, as affecting our water-supply, collecting areas, appears to me the most important ; not simply from the standpoint of getting the water collected and delivered without pumping, but from the standpoint which you and I must recognize is coming—a more liberal utilization of water proper. It was my privilege some years ago to address the Club on water renaissance, indicating that water problems are being studied and water-power improved.

If we did not have to figure for so low a minimum flow, if we did not have to provide for such enormous maximum flows, there are a great many works which could be simplified.

We have the maximum and minimum stream-flow to contend with in building railroads ; bridges and side-cuttings are more expensive ; buildings along the rivers must be constructed to withstand freshets, and engineers should be in

favor of any project which will look toward a restoration and the preservation of our forests.

Dr. Rothrock spoke about the farmers. I think often they are their own worst enemies. The farmers will say a great deal about good roads, but hardly one out of twenty will lend his hand to make a good road. If you give him a good road, it will not be long before he hauls heavy loads over it and cuts it when soft. The farmers are at fault in not taking care of their properties as regards roads and forest fires. The railroads are responsible for many of the forest fires, and the men who take their cows out on somebody's lot and set fire to the underbrush to get good grazing ground are responsible for many. But whoever is responsible we want the law to get hold of them. It is hard for the county commissioner to do anything except to get his friends together at election time, while his office is a stepping-stone for something better. It is doubly hard to ask him to prosecute the railroad company if he is riding on a pass, and the county commissioner meets political snares which are unpleasant; but the question is, does the office mean more to him than the forests to us and to our children? I should not think so, if Dr. Rothrock can make unchallenged the statements he does as to the losses by forest fires.

On election night the fire engines passed my house, which is unusual, because I live in a section where there are few alarms, but an old building was set on fire as an election night celebration. The fire department of Philadelphia went to that unoccupied and abandoned building and put out the fire. Had the authorities been able to find the party that set fire to that practically worthless building he would have been put in jail, but that same boy or man can go to any part of Pennsylvania and deliberately set fire to the timber, worth a good deal of money, and cause a reduction in the growth for at least twenty-five years—that man can set fire to the forests, it can spread to hay-stacks, to fences, to barns, it can go for miles and miles, and how many of you know of anybody being jailed in Pennsylvania for setting fire to a forest?

I do hope, as Dr. Rothrock states, that the matter may be put in such hands that if the laws are found to be unjust, they will be made just, and if they are just, that the offenders will be fairly punished.

The President.—I wish to refer briefly to the question of the influence of forests on rainfall. All investigations, so far as I know, have given only negative results. My impression is that it has never been shown by scientific methods that forests affect the total precipitation, although they do regulate the run-off. I would like Dr. Rothrock to tell us whether his statements concerning the diminution of rainfall in certain districts are based on actual comparative data.

Dr. Rothrock.—I do not think there are any satisfactory records in this country. I do not think it can be said whether the presence or absence of forests affects the rainfall. In certain portions of Long Island, running back a considerable number of years, it can be shown that the rainfall has increased. There is no question at all as to the fact that they do conserve the water that falls. The lowest water-mark we have ever had at Harrisburg I think was during the first three years of the century. A gentleman said to me the other day, "There

is nothing in your theories at all about forests affecting rainfall." Why is it the Susquehanna River is so low to-day? It is just where it was a century ago when the whole land was covered with forests. It is a very simple matter. The question of the forest increasing rainfall is not proved. There always have been and there always will be (whether we have forests or do not have them) years in which the rainfall is exceptionally short. If there are no forests, this shortage will be more severely felt and the streams will be lower than when there are forests. I think it would be a pretty hard matter to prove the statement I am going to make, and that is, I believe we are suffering now larger injuries from drought under a given rainfall than we have ever suffered before. I think that the areas of evaporation are increasing, and the water areas are decreasing. Take the Susquehanna River at Harrisburg. A large portion of that bed is dry in the summer and autumn. I do not know that I have ever seen crops suffering as they have during the last ten years, and yet only during two of these years could we say there has been very marked deficiency of rainfall over a large part of the State.

John E. Codman.—I did not come prepared this evening to speak on this subject; but it is one upon which a great deal can be said. I feel sure that I can not say too much in praise of our Forestry Commission, or the work it has done in restoring the forest-growth of this State. My duties during the last twelve or thirteen years (in charge of the hydrographic data of the Bureau of Water) have led me into observing more of the details of that class of work. There seems to be a lack of information on the growth of trees, in the cultivation of the land and the preparation of it. I confess myself to having very little information on the subject of the growth and restoration of the forests, but have endeavored to inform myself. Probably the most destructive enemy to timber and forest land is the forest fire. Some years ago, having occasion to go into Sullivan County, Pennsylvania, I was impressed with what seemed to me to be a criminal destruction of the timber there—acres and miles of hemlock trees cut down merely for the bark. It was said that the land is so far away that it will not pay to haul the timber out. It was cut down, the bark peeled off, and the branches and dead wood allowed to remain. After a couple of years it becomes dry and inflammable. Carelessness is generally responsible for a fire, and it is almost impossible to stop one before it runs into the standing timber, killing that also. I think a law should be passed to prevent the destruction of this timber and more restrictions taken to prevent these forest fires. In the State of Maine the past summer was very dry. Near where I was visiting a fire was started either accidentally or purposely and burned for several miles through the standing timber. The fire does not entirely destroy the tree, it burns out the top and the roots. The first storm that comes blows this timber down, and then there is another opportunity for a fire; it is almost impossible to clear it out and, furthermore, no attention is paid to this dead wood until another fire is started. There is very little care and a great deal of criminality in all this, and I think each of us should do what we can to assist in helping the Forestry Commission to establish laws to prevent these fires and to the restoration of the forest area.

There has been considerable said about the destruction of the forests causing climatic changes. In my opinion and observations it seems to me that no material climatic changes could take place unless there was some great change in the conditions of the atmosphere. The rainfall on the eastern part of the United States is dependent upon the volume of warm, moisture-laden air from the Atlantic Ocean. The statistics of the Geological and Hydrographic Surveys show an average rainfall along the seaboard of about forty-five inches. There is a gradual decrease west of the mountains, and in the State of Kansas there is not more than five inches. There is no observed change in the average volume of water falling on the ground. The destruction of the forests produces a marked effect upon the flow of the streams and rivers. Instead of the average flow being distributed over the year, as it is when covered with forest area, the flow of the stream is made up in freshets, coming in large volumes, and the result is a greater average run-off. We well know, to our own discomfort, in the Schuylkill Valley, the coal-dust and the sweepings of Schuylkill County are brought by the freshets to Fairmount dam. Early in the spring there were some severe freshets, and you all know the condition of the water. The flow of the streams without forest area will be slightly above the average and the minimum flow will be below the average. It is a fact that if the valley of the Schuylkill were covered, the greater part, with forests, we would have nothing like as much material brought down in the water as there is at the present time. The velocity would not be so great, and whatever was swept off the surface would not be brought so far down. At the present time the water comes in frequent freshets, bringing large quantities of surface soil with it.

L. Y. Schermerhorn.—Apart from the values which will arise from the preservation and restoration of our forests, this question of the prevention of flood discharges, from rainfall run-off, is one with which engineers must strongly sympathize. I am satisfied that there is no practical way, except in the preservation and restoration of our forests, to overcome the difficulty which now stares us in the face, not only here but elsewhere, in the matter of disaster and destruction resulting from flood.

Some years ago I was called upon to make an examination and report upon the feasibility of preventing destructive freshets or floods on the West Branch of the Susquehanna River. The city of Williamsport was particularly involved, and had suffered severely. An examination developed the fact that it would not be difficult or excessively expensive to surround the city of Williamsport with barriers reaching above the height of flood water. Nevertheless, the area so surrounded would be at times below the surface of the river, necessitating expensive methods of getting rid of surface drainage; and while the problem became one that was solvable, at least by the application of considerable expenditures, it was not one that could be met in such a way as to remove all the difficulties, and I very quickly became satisfied that the preservation and restoration of the forests along the various tributaries of the West Branch of the Susquehanna would be the best practical solution of the entire question. This State is not alone in suffering from such inconvenience and disasters. The problem is an

old one. Italy has gone through the same experience; also France and Germany. The discharges of their torrential rivers have been carefully studied, and only one solution has been proposed, and that is the restoration of forests upon mountain slopes.

I was very much interested in a work, written nearly two hundred years ago, by an Italian monk,—Paulo Fresci,—and his conclusions will be found interesting and valuable reading. The problem given him was to devise an efficient method for overcoming the freshets of the River Po. His methods were successful, and are applicable at the present time. The Mississippi, the Missouri, and the Ohio Rivers every year bring down millions of cubic yards of material, and our engineers are struggling with that great problem—the improvement of the waterways of the valley of the Mississippi River; and the difficulties of it are materially added to by the torrential discharges to which reference has been made. The French and German engineers, in the solution of this problem, begin upon the mountain slopes by arresting the free discharge of the little rivulets that are formed by a rain-storm; placing little barriers not more than a foot in height, and slightly larger barriers upon the brooks formed by these rivulets, and still heavier barriers upon the larger streams; attempting to imitate nature in holding back this rainfall which, if it fell upon slopes fairly wooded, would find a spongy material in which the water would be held, and yielded so slowly that it would reach the larger discharging streams in such a manner as to prevent the freshets which would otherwise occur. The freshets which have occurred in the past at Johnstown and Williamsport are bound to happen again, and our protection of the large populations submits a problem that the engineer of the future will be obliged to grapple with and solve; all study of the question points to the only practical solution as lying in the restoration of the forests of the mountain slopes.

The extent to which trees and forests as a whole influence the deposit of rainfall and the methods of that deposit can be brought very clearly to our mind by this illustration. In a journal devoted to arboriculture I read recently a statement something like this: A large oak tree was found to contain about seven hundred thousand leaves, and from May to September, inclusive months, the tree absorbed from the soil and transpired into the atmosphere through its leaves, one hundred and twenty-five tons of water. That reduced to daily transmission amounts to about sixteen hundred pints of water or about two hundred gallons. If this is a fair measure from a single oak tree, what does it become when multiplied by the hundreds of trees which make a forest?

Dr. Rothrock.—I desire to express my very great gratification in finding that the Forestry Commission has so many warm friends among engineers, and I am very sure that we are nearing the solution of the forestry problem in Pennsylvania. I do not know anywhere of any element in any political party, or in any combination of citizens, that is against the forestry cause. I think now it is simply a question as to what means we will adopt. I think we may regard the question of forest preservation as fully and fairly fixed in the minds of the people.

If we can not follow out the lines of thought and practice developed in other countries, we should, to a certain extent, be called upon to develop a system of forestry in our own country, and I think it will be done in the near future.

P. A. Maignen.—I have not much to say on the subject, yet I may state that there is a law in France, and I believe in Austria, preventing any more wood to be cut down than is planted. The forests are divided in lots like squares in Philadelphia, and for every lot sold one has to be planted. A measure of this kind would, of course, be most beneficial in this country. In Algeria, which is a very dry country, the eucalyptus or gum tree from Australia has been imported. It is largely planted, grows very quickly, and does much good to the country.

Referring back to the preservation of forests, I would like to draw attention to a subject of importance—that of insects. Twenty-five or thirty years ago appeared in France a disease of the vines, said to be imported from America, and called *Phylloxera vastatrix*. In a few years it destroyed practically ninety per cent. of the vineyards.

This insect, as its name implies (*Phylloxera*, eater of leaves), destroys the leaves in American vineyards, but in Europe it has taken to the roots. The leaves are still the habitat for the reproductive phase of its life, but the destructive phase takes place at the root, or rather on the tender rootlets. The mode of cultivation of the French vines is probably to be blamed for this fact. The vines are cut down every year close to the ground; the land is highly tilled and kept clean, soft, and open, so that the rootlets, according to the rule that prevails in horticulture,—namely, that the roots only go as far as the branches,—grow near the surface and the insect has no difficulty in reaching the succulent fibrous feeders of the plant.

The insect is very small indeed, of a bright yellow color, in form like a microscopic beetle about the size of a grain of fine table salt. The reproductive members of the family are winged and the destructive members are wingless. The wingless members of the tribe reproduce themselves parthenogenetically. The American vines, and some others that grow in Europe, are permitted to spread their branches high above ground, so that the roots and their tender feeders go so far in the ground that it is presumed the insects can not reach them, or if they do, there are still sufficient roots that escape their depredation to maintain life in the tree.

There is a phylloxera of the oak which differs from the vine phylloxera in the length of the antennæ. I simply mention this matter to draw attention to the fact that there is plenty to do for the entomologists in the question of forest preservation.

I agree with all that has been said concerning the distressing consequences of the removal of forests. The moisture kept under the trees finds its way gradually into subterranean reservoirs from which come springs. This is the ideal source of a good water-supply. Without forests the rain not only goes immediately to the rivers, but washes down therein vegetable and animal debris, which have much to do with the spread of disease.

John C. Trautwine, Jr.—Dr. Rothrock's remarks recall very pleasantly to

mind my visit to Cornell University, in June last, on the occasion of the annual commencement.

On that occasion, Professor B. E. Fernow, late Chief of Forestry Division, Department of Agriculture, at Washington, presented to the audience, with pardonable pride, what he claimed to be the first graduate in forestry ever produced in America. This, he said, was the result of some twenty-five years of hard labor, by which I did not understand him to mean that the entire quarter century had been devoted to the evolution of that one young gentleman, whose age had hardly reached that limit, but that, during that time, the professor had been keeping his weather eye upon forestry education, and devoting much effort to its development.

Dr. Rothrock's recital of the difficulties which he has encountered in bringing the public to a realizing sense of its losses by reason of forestry destruction, strikingly points out the difficulty which a partially enlightened community of partially public-spirited men experiences in protecting itself against the rapacities of the unscrupulous. On the one hand, we have a small body of men desperately interested in looking after their own pockets and quite regardless of the interests of the community, and, on the other hand, a public only half alive to the importance of the depredation which is going on.

It is to be hoped that Dr. Rothrock's efforts for the public welfare may take effect before it is too late to repair the damage worked by the few against the apathetic many.

CHAINS AND CHAIN GEARING.

CHARLES PIEZ.

Read February 2, 1901.

CHAINS have so well established a place in the mechanical world as a means for transmitting power that it is necessary to say but a few words concerning their scope. They are applicable wherever a positive speed ratio is to be secured, wherever heavy strains at low speeds are to be transmitted, wherever a damp or hot atmosphere would prove destructive to belts or ropes, and wherever power is to be transmitted without sacrificing the flexibility of the shaft supports, as in the case of agricultural machinery.

Just as gears may be roughly classed as cut and cast, so chains can be grouped as machine-made and cast. The former have been almost solely applied to bicycles and motor cars, while the latter are applied to elevating, conveying, and the transmission of power in the mechanical arts. The limitation to the use of machine-made chain is almost wholly a matter of price, and is due very largely to the fact that its manufacture has never been so systematically organized as to produce a well-made chain and sprocket wheel at a reasonable price. Machine-made chains, when properly designed and well made, are stronger, more durable, and less noisy than cast chains of equivalent bearing surface and section. But owing to their lower first cost, the latter have been much more extensively used.

I described machine-made and cast chains as resembling cut and cast gears in their classification; I might carry the simile further by stating that there is as much difference in cast chains as there is between well-made machine-moulded gears and gears cast from carelessly made patterns. That chains shall run properly with their wheels, it is essential that the links shall be accurate as to pitch, that the pintels shall bear uniformly in their seats, that the wheels shall be of the proper pitch diameter, the teeth of proper pitch and shape, and that the bearing and sprocket surface shall be proportionate to the strains to be transmitted. The last requirement is one that can

be overcome by proper design, but those who are familiar with the "vagaries" of castings can imagine how difficult is the realization of the other four requirements. The high-class Ewart malleable chains are subjected to seventeen (17) distinct operations after removal from the annealing pots, and while primarily cast chains, they are, by selection, by treatment, and by testing, brought to an accuracy and uniformity which leaves but little to be desired.

The wear on chains is twofold, internal and external. The internal wear is due to the articulation of the links, and takes place between the pintel, or what in Ewart chains is termed the end-bar, and its bearing. The external wear is that which is caused by the engagement of the link with the sprocket.

Lubrication of both the chain bearings and the teeth of the wheels would largely reduce both kinds of wear, and in the larger chains used for dredges, special provision for properly lubricating the chain bearings is made. But these provisions are applicable only to very large chains, and even were they not so limited, the cost of such devices when applied to the smaller chains would stand in the way of their general adoption. Every chain, no matter what its duty or what the atmosphere it runs in, should be lubricated at frequent intervals, tests having demonstrated that a chain lasts longer when a mixture of emery and oil is applied to the chain, than when the emery alone is applied. The joints should be wiped free from dust and sticky oil, and an effort should be made to get the lubricant into the bearing. Besides this, the teeth of the wheels should be cleaned and a heavy grease applied to them.

In a large percentage of cases, when a chain gives trouble, such a treatment will give relief.

But the chain manufacturer realizes that the lubrication of chains is not always an easy matter, and his aim has therefore been to produce a chain joint which would prove durable in spite of imperfect lubrication.

Two general methods have been employed to achieve this result. The first method consists in the use of a rocking joint, which is an application of the knife-edge principle to the chain bearing. This application was the subject of a generic patent granted Mr. James M. Dodge, on July 13, 1880. Only a fractional part of a complete revolution is possible with this form of joint; but by limiting the number

of teeth of the smallest wheel to be used, the arc of articulation can be brought within the practicable limits of the rocking joint.

This joint is practically free from friction, even without a lubricant; and when the force to be transmitted lies well within the safe limits of the strength of the bearing edge, it gives excellent results in practice.

The Morse bicycle chain and the malleable iron rocker-joint chains are examples.

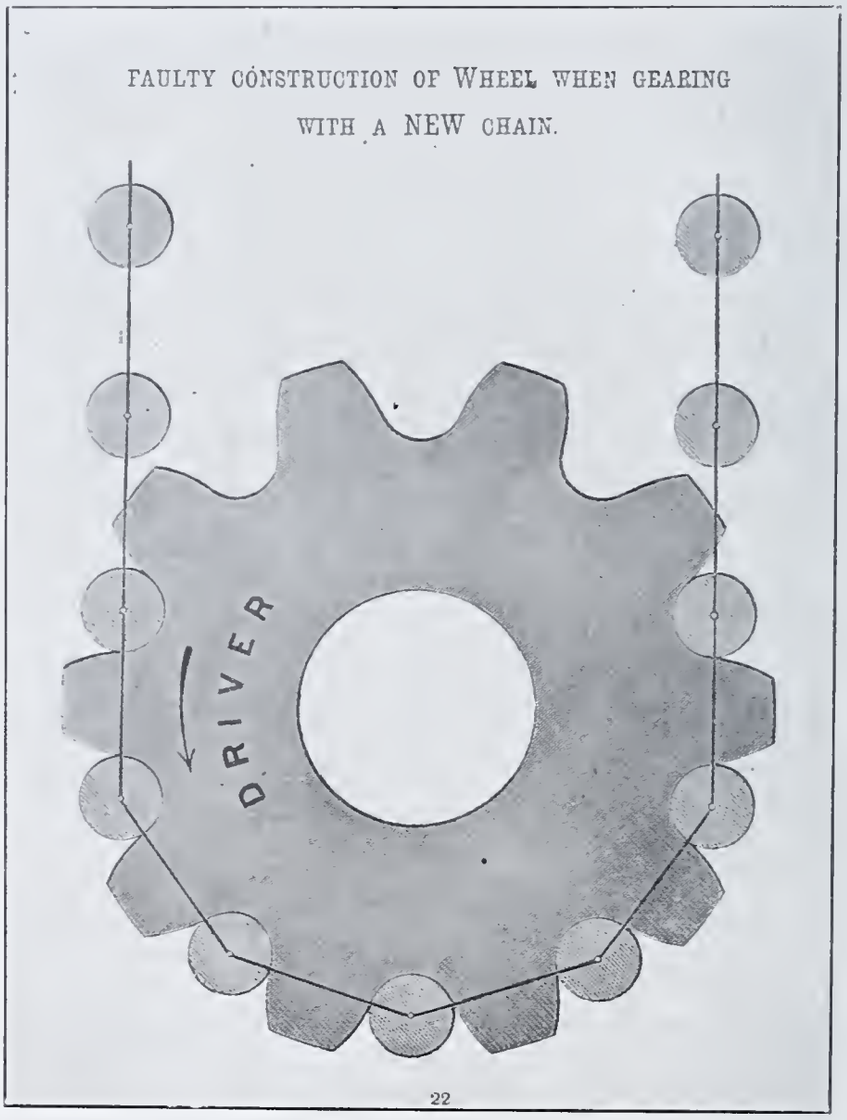

FIG. 1.

The second method to obtain a durable joint consists in hardening the surfaces in contact. In cast or malleable iron chains this is accomplished by using case-hardened steel pins bearing against bushes of hard metal. In the chain invented by Mr. Francis Ley, of Derby, England, this principle is carried one step further. The cast frame is cut away so that the outer surface of the case-hardened bush bears

against the wheel. Both the external and internal wear in this chain is therefore concentrated on case-hardened parts, and these parts are made so that they can be renewed when worn.

As the external wear is wholly due to the action of the wheel on the chain, it will be necessary to give a brief description of the action of the chain on the wheel and the rules which should govern a proper wheel design.

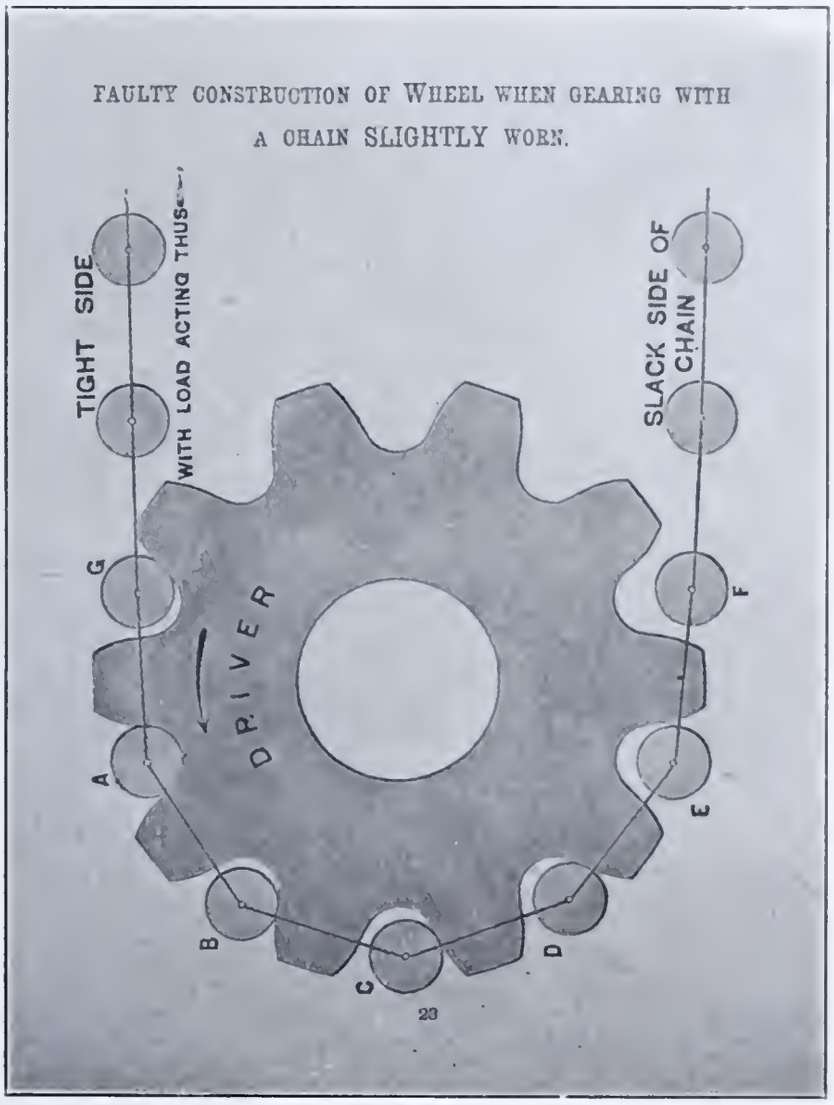

Fig. 2.

The popular notion is that when a chain gears into a toothed wheel, all the teeth entering the chain are simultaneously in action. This is not true, for no matter how accurately a chain and wheel may fit when new, the moment a strain is brought to bear on the chain, and the wheel begins to turn, the pins begin to bed themselves into their bearings, producing at once a lengthening of the pitch. The amount of this bedding or seating may be infinitesimal in each joint, but it is

sufficient to destroy the simultaneous bearing on all teeth. The action between chain and wheel tends to wear the chain long and the wheel small, and results in one tooth doing all of the work at any one time.

The following cuts will illustrate the principle of chain gearing with the ordinary types of chain:

Figure 1 shows a wheel with a chain fitting every tooth. This is an ideal condition that may exist before the gearing has been put into operation and when the chain and wheels have been made with ex-

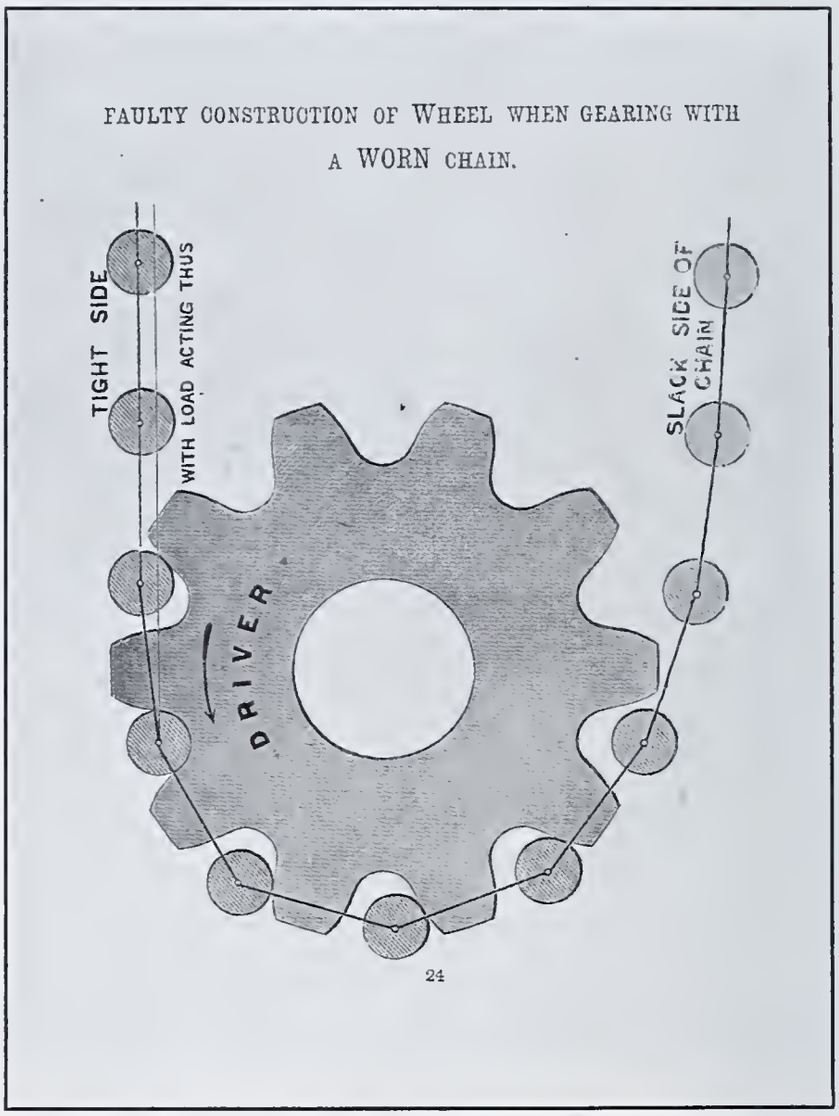

Fig. 3.

treme accuracy. But this condition ceases as soon as the chain runs long enough to bring the joints to a bearing. Then the chain approximates the position on the wheel shown in figure 2, which represents the wheel shown in figure 1, when gearing with a chain slightly worn.

The link "A" is now the only one which is in working contact with its tooth, the reason being that the chain has lengthened, whereas the

wheel has remained the same. As the wheel turns beyond the position shown in the figure, link "G" wedges itself into position and crowds out link "A," throwing the latter into about the position shown by link "B" in figure 2.

The work is therefore done by one tooth, and that, too, during the period when the tooth is acting like a wedge to prevent the seating of the link. Only a portion of the power, therefore, is usefully employed.

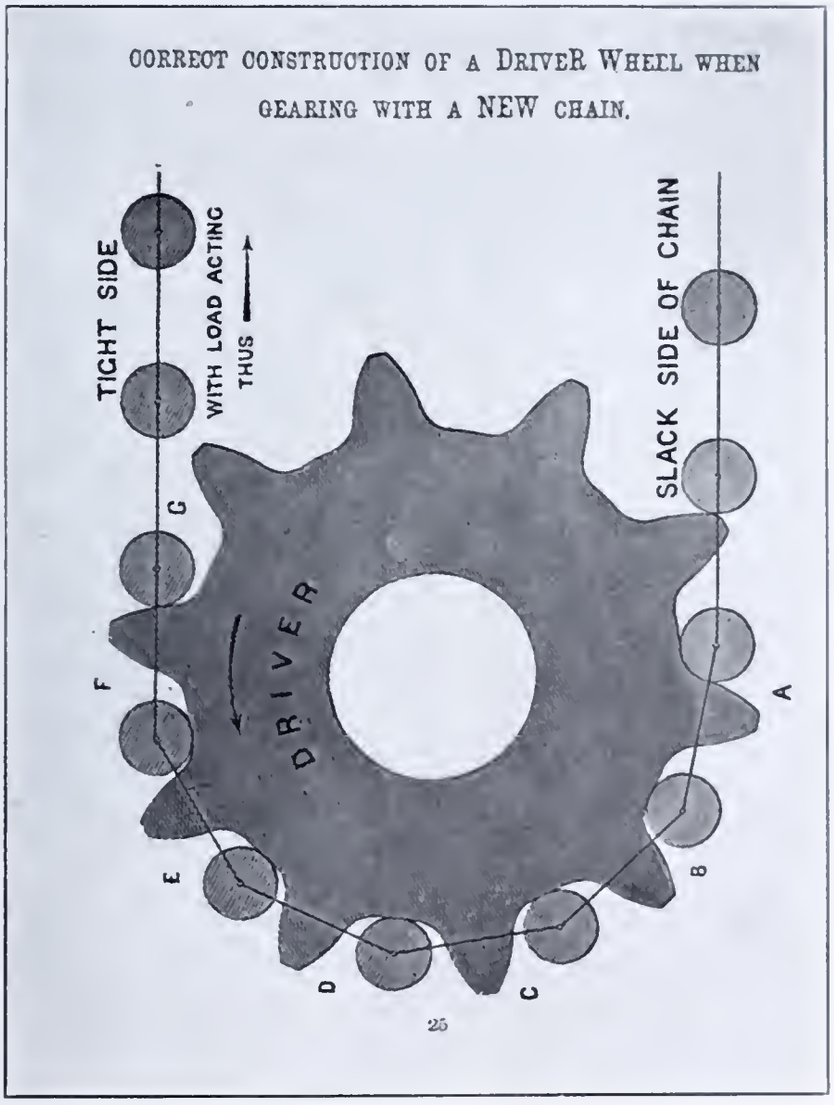

FIG. 4.

Figure 3 represents the third stage of the same wheel—viz., when gearing with a worn chain. In this instance the defects of the last case have become aggravated and the working of the chain becomes irregular, the links frequently jumping the teeth.

The construction shown in the foregoing results in a waste of power, a rapid wear of the chain, and an irregular and jerky motion.

In figure 4 is shown the correct construction of the *driving* wheel, and this figure shows it gearing with a new chain. As will be seen, the wheel pitch is longer than the chain pitch, and the tooth space is much wider than the accommodation of the chain joint would require. This construction brings the driving tooth at the outgoing end of the chain instead of the incoming end.

Figure 5 shows the same *driver* gearing with a slightly worn chain.

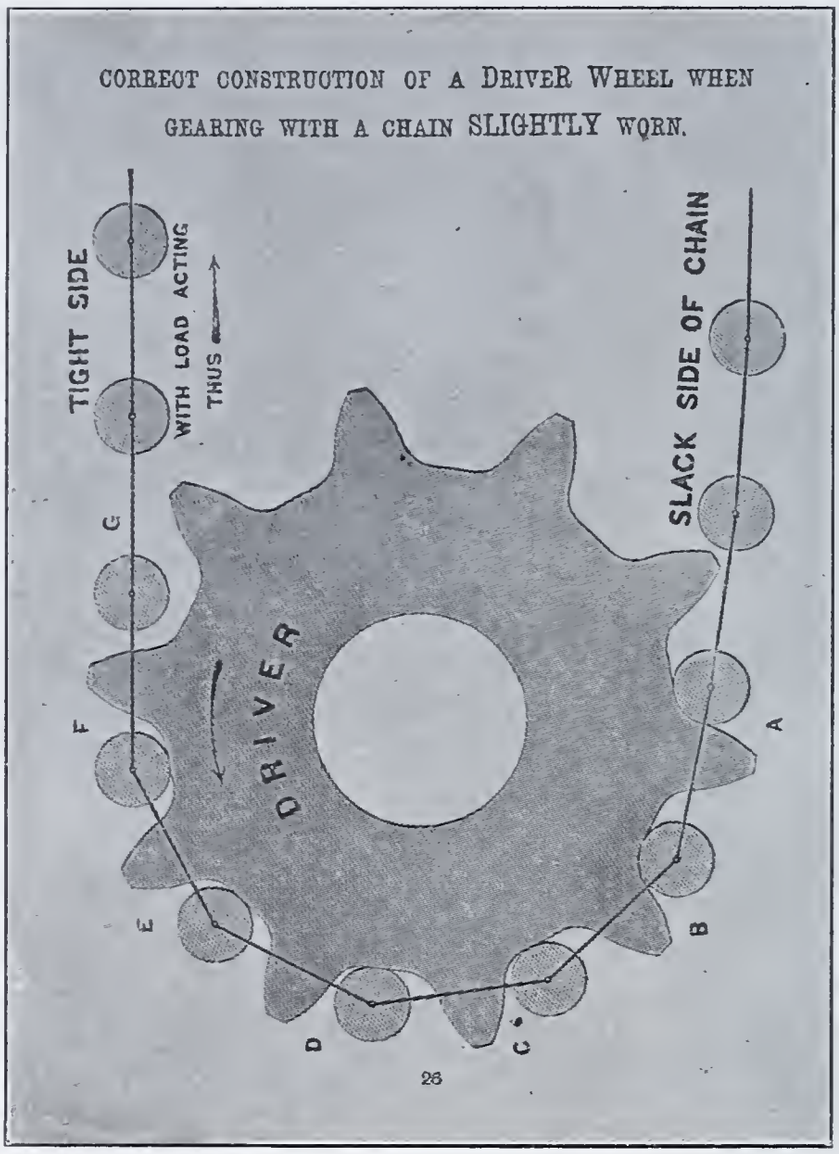

FIG. 5.

The driving is still done by the tooth engaged with the outgoing link, but links "B," "C," "D," "E," and "F" have moved closer to their teeth without touching them.

Figure 6 shows the correctly constructed driver gearing with a much worn chain, and in this case the conditions, after a long and useful life, approximate those of the new chain when gearing with an

incorrectly constructed driver, as shown in figure 1. To secure the proper operation of the chain, the driving face of the tooth should be so curved as to permit the outgoing link to readily free itself. The release must at the same time be gradual, so that the following link will slip back into engagement with the sprocket without jar.

The proper design of the tooth face is shown in figure 7, which shows the first stage of the outgoing chain.

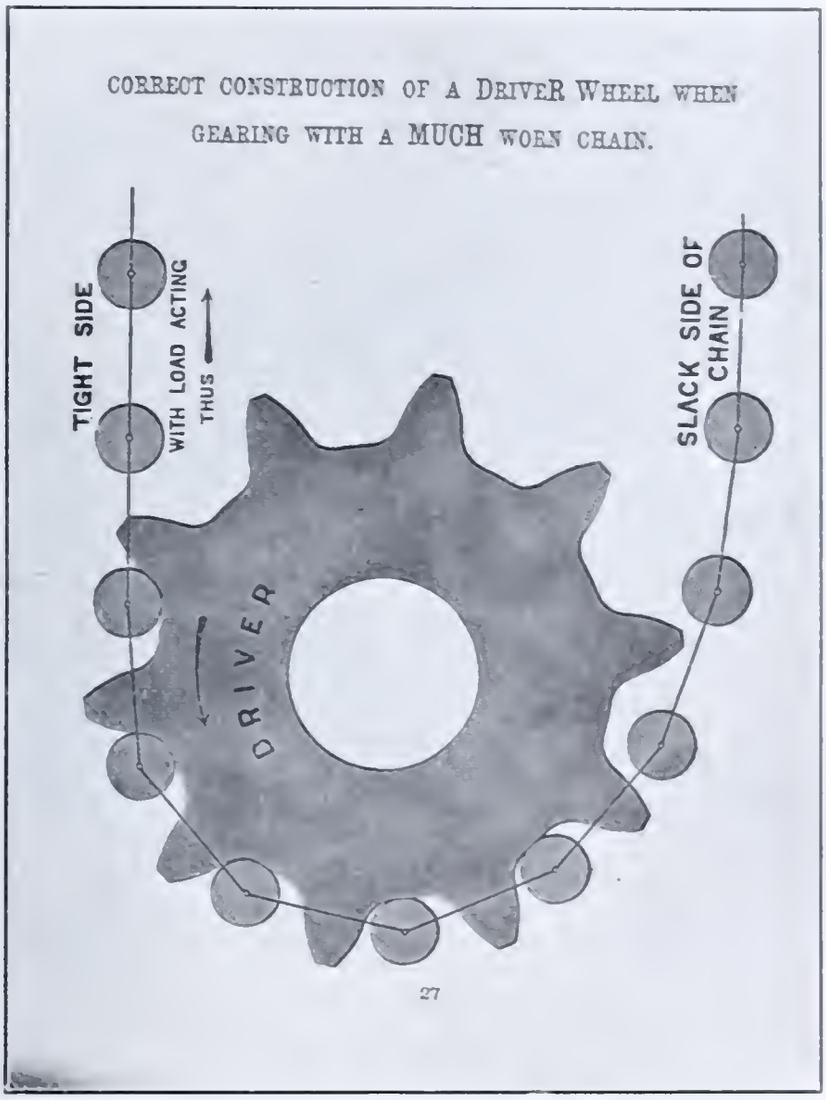

FIG. 6.

As the foregoing cuts have shown the advantage of making the driver wheel longer in pitch than the chain, so the two following cuts will point out the advantage of making the *driven* wheel slightly shorter in pitch than the chain.

In practice, the chain and wheel pitch are made alike, because the lengthening of the chain as soon as it is set to work produces at once the desired effect.

Figure 8 shows the correct driven-wheel gearing with a new chain, and figure 9 shows the same wheel gearing with a worn chain. It is apparent that in the driven wheel, as with the driver, the tooth against the outgoing link is the one in action.

Mr. W. D. Ewart, in his invention of the differential pitch sprocket wheel, has combined the principles that the driver-wheel pitch shall be large and the driven-wheel pitch small, in a single wheel.

A careful study of the action of a chain gearing with a wheel shows that unless the wheel face is kept well lubricated, which in practice

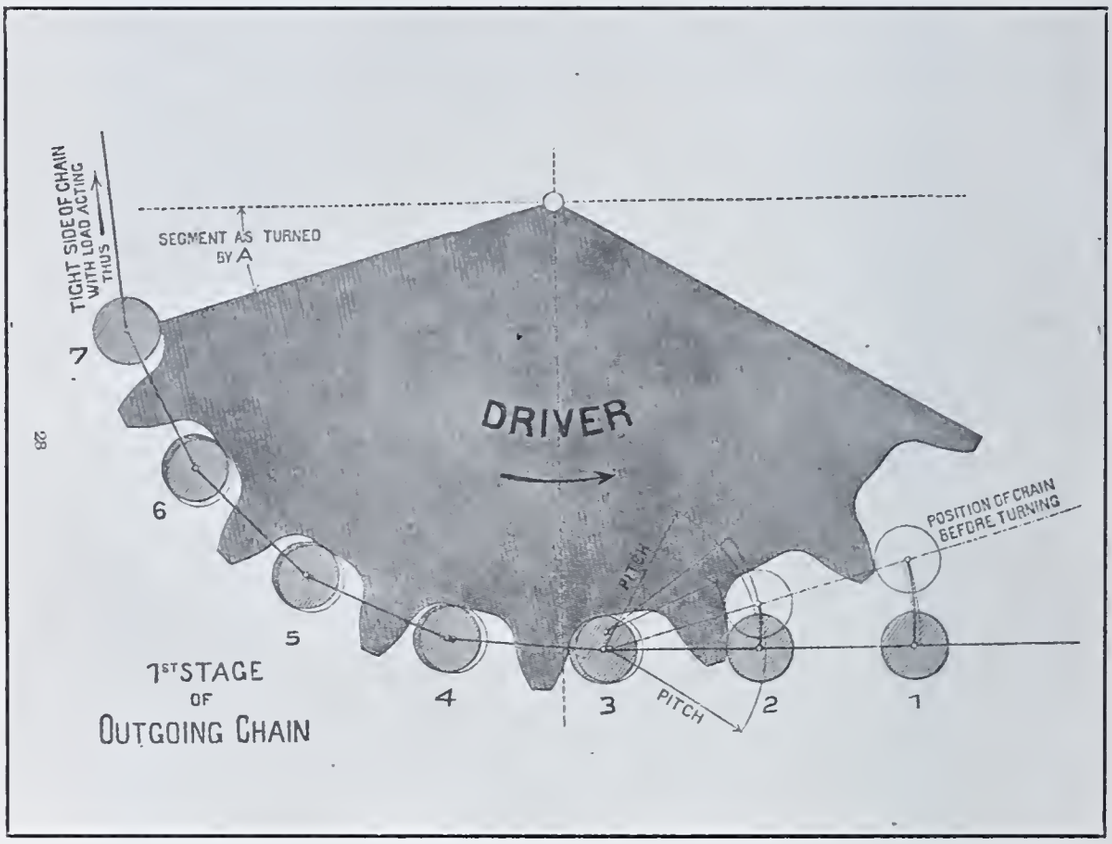

Fig. 7.

is rarely the case, a more perfect action is secured by the type known as the roller chain than by the ordinary solid joint chains, like the block chains or Ewart chains, because the release of the outgoing link and the slipping back of the remaining links is accomplished with less jar and with less wear on the external part of the chain joint by rolling than by sliding.

The ratio of the roller to its pin should be as large as the strength of the chain will permit, but without encroaching too much upon the tooth space of the wheel; for the above analysis also points out the fact that the greater the number of teeth, the larger must be the

space between them in order to take care of the elongation of the chain when worn. This means that the larger the number of teeth, the thinner the tooth. This is sound from a practical standpoint, because, chain speeds being the same, the greater the number of teeth, the less frequently does each tooth come into action.

There is a limit to the number of teeth which a wheel should be given, and this limit—not the possible limit, but the practical limit—

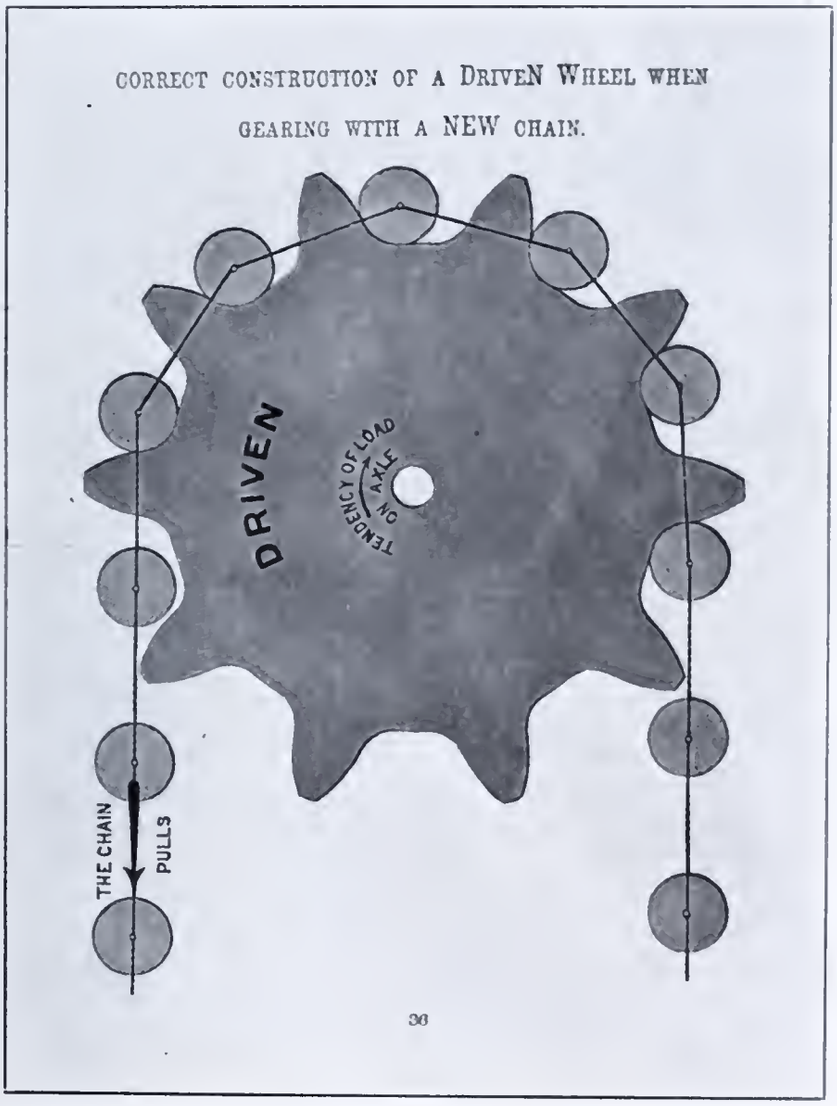

FIG. 8.

can be set down at 100 for cut wheels gearing with accurately pitched machine-made chains, and at less than half this number for cast wheels and cast chains.

It is evident from the foregoing cuts that in the operation of any of the ordinary chains, no matter how accurately made, and no matter how correctly cut the wheel, the transfer of strain from one link to

the following involves a blow which becomes more frequent, and therefore more severe, as the speed increases.

Take the case of a chain of 3″ pitch traveling 900 feet per minute: Each foot of travel means the engagement of four links, and this speed, therefore, represents 3600 blows to the chain per minute.

The severity of the blows is still further increased by the fact that the chain at high speeds vibrates in both a vertical and a horizontal

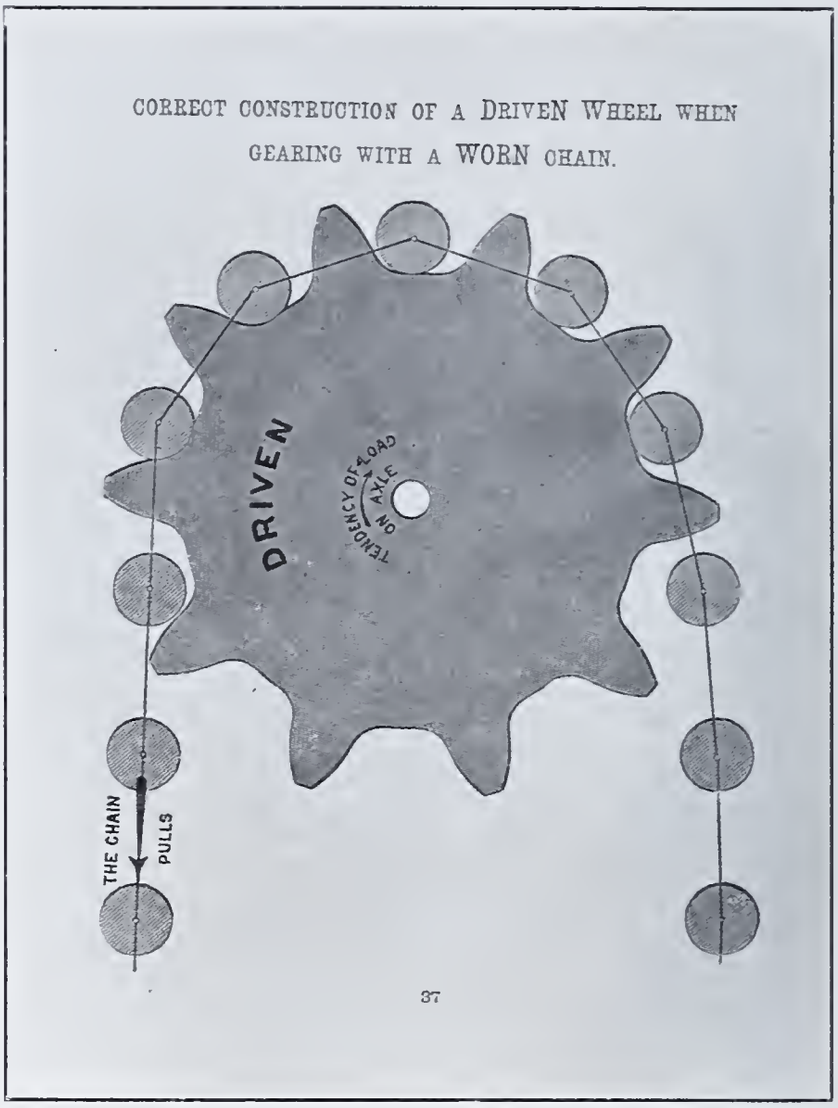

Fig. 9.

plane and strikes heavily against the face of the wheel in consequence. The heavier the chain, the greater the force of the blow and the quicker the destruction of the chain.

In designing chains for high speeds, therefore, material of the very highest degree of strength and tenacity must be selected so as to keep down the weight.

We have experimented for a long time on the determination of the

proper strain which a chain can be called upon to transmit at various speeds, and while our experiments are not complete enough to tabulate, they show that, for malleable iron chains, for instance, the permissible strain must be quickly reduced as the speed is increased.

Suppose, for instance, that in the following diagram (Fig. 10) the horizontal divisions represent speeds and the vertical divisions effective horse-powers. Then, if we follow the generally accepted method of H. P. determination for chains, we will assume the permissible working strain to remain the same at all speeds and obtain the results shown by the straight dotted line. If, however, we take into account the rapidly increasing destructive effect of blows at high speeds, we will find that the effective power transmitted is represented by a line which assumes the shape of a curve, flattening as the speed increases and finally dropping back.

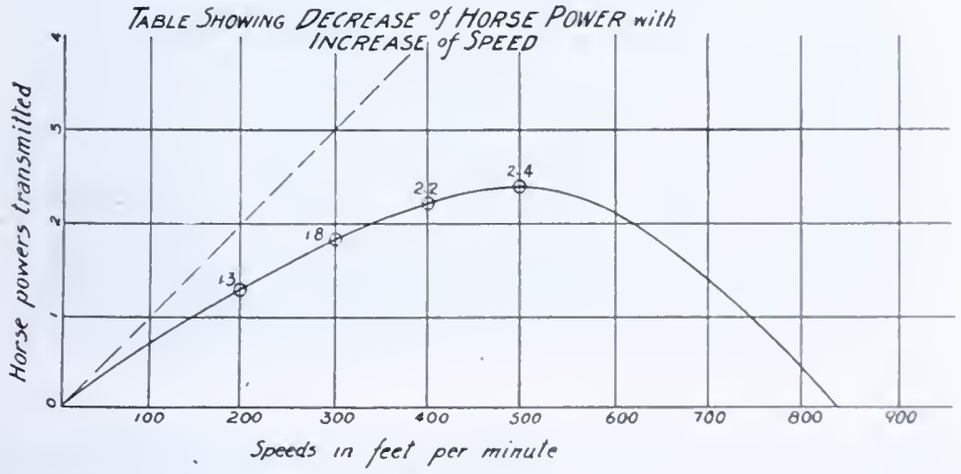

FIG. 10.

The actual strain in chain, however, increases with the speed, and the chain can be run so fast that it will destroy itself without performing useful work. Our experiments fully bear out this theory, and indicate that a malleable chain at 200 feet can be safely run at twice the working strain of one at 50 feet, and that at 500 feet the chain will transmit its maximum power. These statements are all made, of course, on the assumption that the total strain existing in the chain—that is, the sum of the strain due to the driving force and that due to impact—shall be the same at all speeds.

Now, as stated above, the limitations to chain speeds are due, first, to the weight of chain; and, second, and more particularly, to the method of engagement.

High-speed chains must therefore be light; they must be accurately made as to pitch, and they must be made durable so they will retain their accurate pitch. The wheel must likewise be accurately cut and

THE PRINCIPLE OF GEARING.

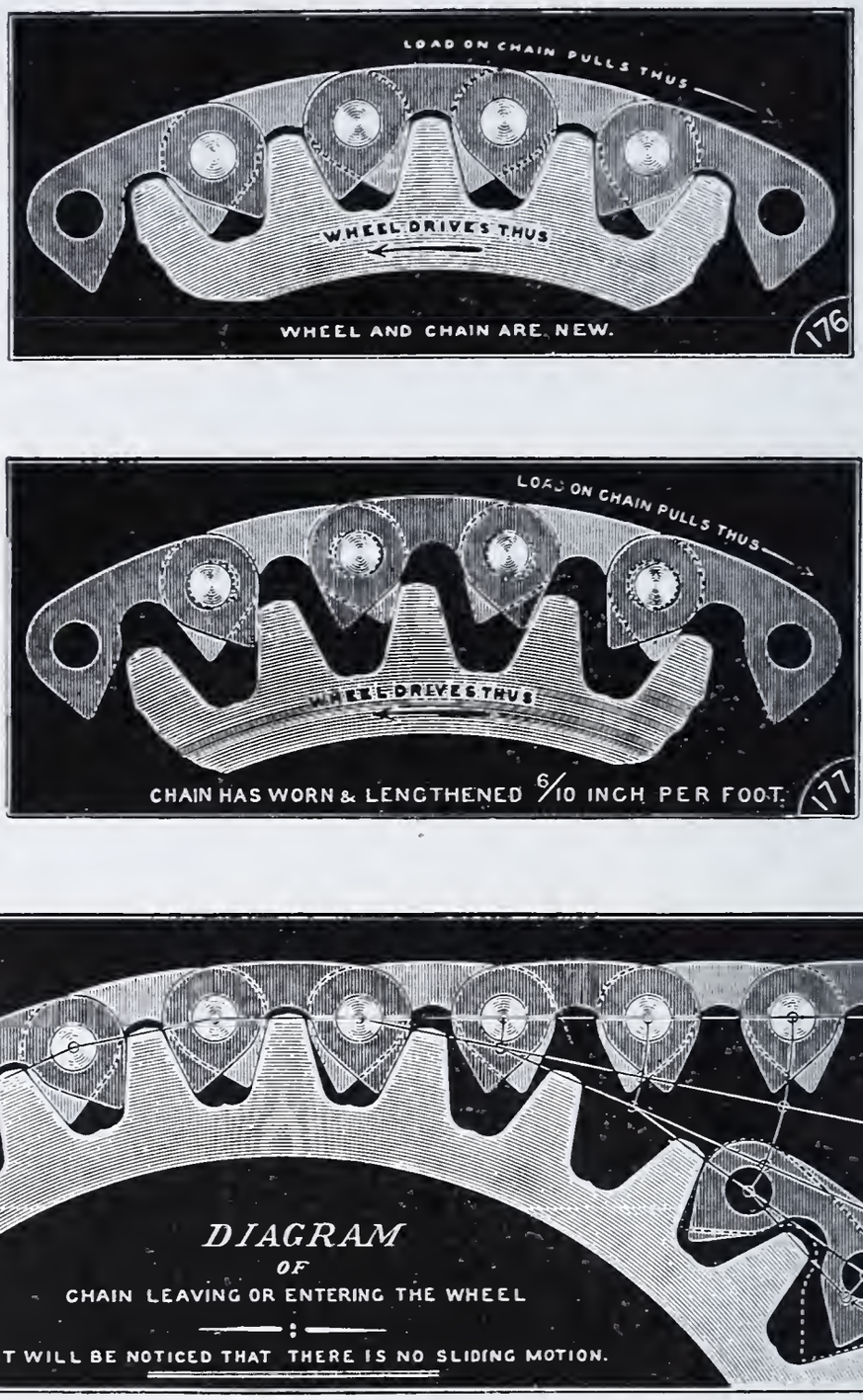

Fig. 11.—Renold Silent Chain Gear.

the teeth formed in such a way that the transfer of strain from one tooth to the following one is made with the least possible jar.

But with all these requirements fulfilled, chain speeds of 1000 feet

per minute and upward are objectionable for most transmissions because of the noise. This noise is due wholly to the manner of engagement between the chain and chain wheels, and increases very rapidly as the chain stretches from wear.

To Mr. Hans Renold, of Manchester, England, belongs the honor of having developed a driving chain which overcomes the defects inherent in the ordinary type of chains, and makes it possible to attain speeds of 1200, and even 1500, feet per minute, with as little noise as accompanies the action of a leather belt. This he accomplished by so designing the chain and wheel that the stretch is automatically taken up, or rather compensated, and the correct principle of chain gearing is preserved to the last. The compensation for stretch or wear is accomplished on the wheel by the chain assuming automatically a larger pitch diameter, this result being achieved by the peculiar form of link and tooth. The incoming link seats itself firmly against the face of the tooth, and retains this position until its release at the other end of the driving arc. There is no transfer of load from tooth to tooth by slipping back, but the load is evenly distributed over all the teeth in gear, and the action is altogether silent and without the slightest trace of jar or jerk.

The "silent chain gear," as Mr. Renold has styled it, is very durable, and has lent itself to purposes where chains have heretofore been inadmissible.

It seems strange to see a sprocket wheel on the shaft of a motor running 800 r. p. m., and to find a chain transmitting power from this motor to a counter-shaft with a speed reduction of five to one. And yet this chain does its work as noiselessly as a belt, and very much better than a cut gear and a rawhide pinion. The illustrations of this chain are so clear as to explain themselves, and demand no further description.

As all the teeth in gear are simultaneously in action, and as this continues to be the case even when the chain becomes worn, it is evident that several chains can be run simultaneously on the same wheels, and that each will do its proper proportion of the work. This makes it possible to transmit large powers by using a number of chains side by side, and several very successful installations transmitting 150 H. P. and over have been made by Mr. Renold in this way.

Accurate workmanship in both chain and wheels is absolutely necessary, and machine-cut wheels must therefore be used.

Several years ago Mr. James M. Dodge designed a sprocket wheel for use with the Ewart or other form of malleable iron chain, in which the wear of the chain is compensated for by its assuming a gradually increasing pitch diameter, as in the case of the Renold silent chain gear. The design, however, is quite different, as will be seen from the illustration (Fig. 12). In a long series of dynamometer tests, wheels of this design, made of chilled cast-iron, have shown them-

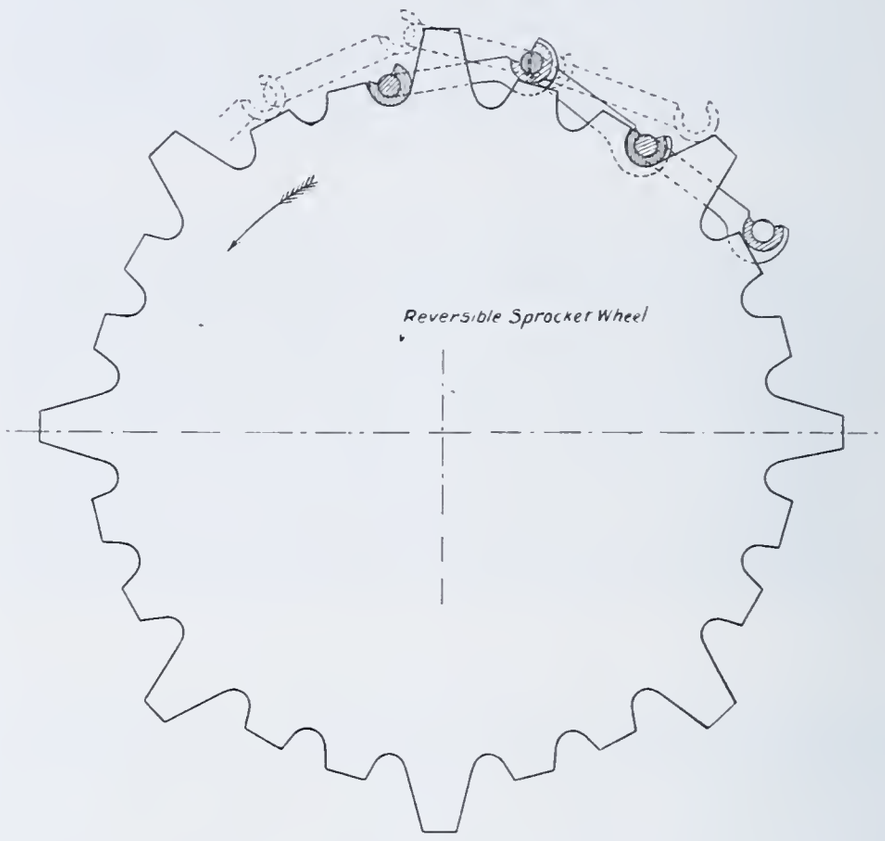

Fig. 12.

selves indestructible when used as drivers, and have shown that by their use the life of the chain can be practically doubled.

In conclusion, permit me to say that chain gearing, when properly designed and taken care of, is as little subject to derangement as any other power-transmitting medium. Recent developments will no doubt greatly extend the range of application of this form of transmission, and will call for a better understanding of the correct principles that underlie chain gearing by the mechanical world.

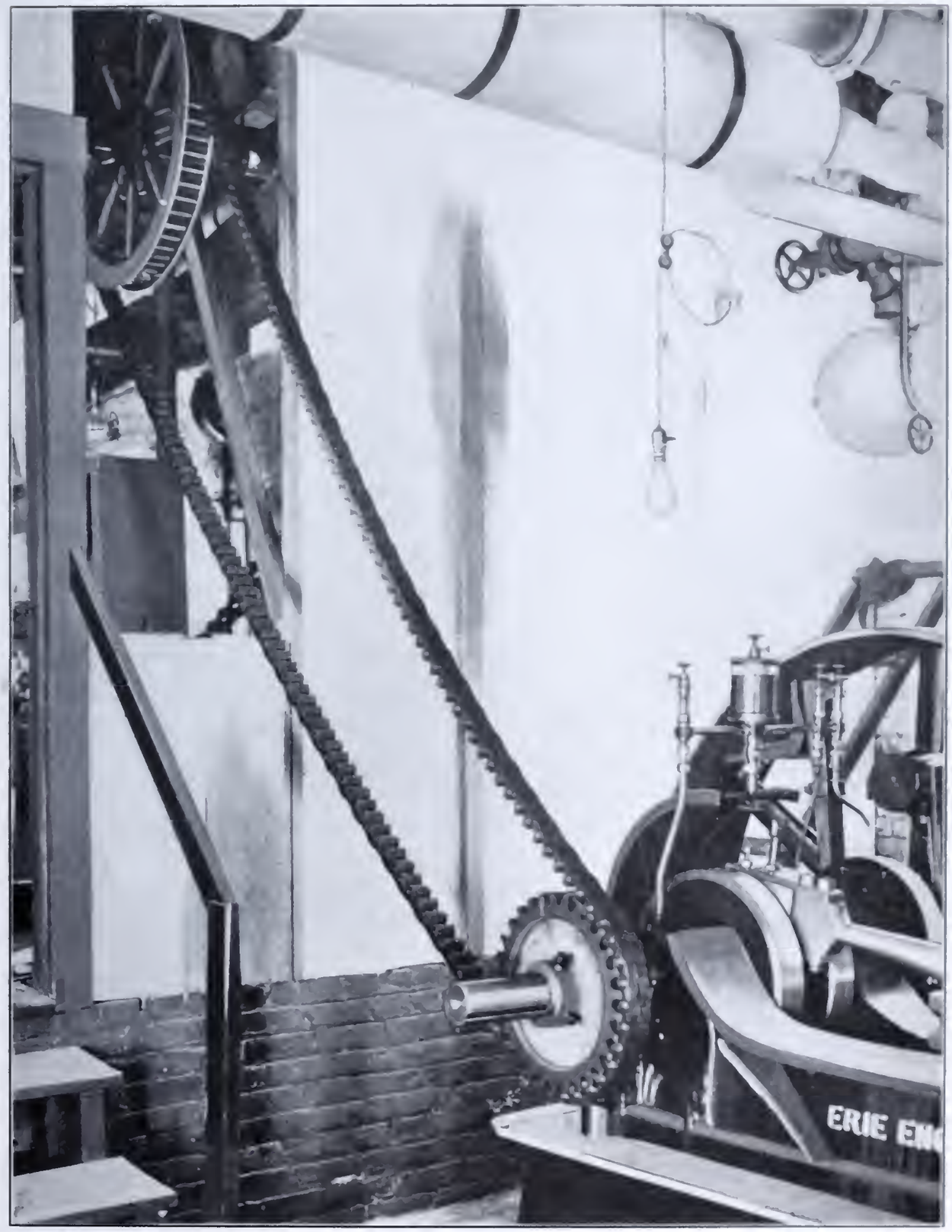

FIG. 13.—A SILENT CHAIN DRIVE FROM ENGINE TO LINE SHAFT.

DISCUSSION.

HENRY S. SPACKMAN.—When you are using a No. 88 chain at 900 feet per minute and find it breaking, and you put on No. 103 chain, are you decreasing your efficiency?

CHARLES PIEZ.—Yes, in one respect, but not in another. The general tendency should be that for the higher speed you should use higher class material, so as to get the same strength with less weight.

MR. SPACKMAN.—Is the speed of 500 feet fairly constant for all chains, or has it not been determined?

MR. PIEZ.—That is a very difficult thing to determine; our feeling is that it is practically constant.

MR. SPACKMAN.—For chains anywhere between No. 88 and above?

MR. PIEZ.—Yes, and even for a smaller chain.

L. F. RONDINELLA.—I think you mentioned that 100 teeth was the maximum number permissible. What is the minimum?

MR. PIEZ.—On the silent chain wheels 19 teeth is the minimum. That is determined by the angle of the chain. Here the angle between the two faces of the link which Mr. Renold designed is 52 degrees. That rather determines it. If you make the wheel smaller, the chain link begins to undercut the tooth. With the 19-tooth wheel you have got practically a straight face.

L. Y. SCHERMERHORN.—Do you find that your chains become crystallized by use, and that this crystalline structure causes the chains to break?

MR. PIEZ.—I am unable to answer your question as applied to malleable chain, except to say that nothing in the fracture of links after long service indicates crystallization. Our experience in the steel driving chains has not been extensive, but Mr. Renold has had silent chains in operation for four years at speeds of from ten to twelve hundred feet per minute. They have given no evidence of distress during that time. It is probable that the perfect action between chain and wheel has had a good deal to do with this. The chain is driven without any blow or shock, and there is, therefore, very little danger of crystallization.

MR. SPACKMAN.—What is the highest limit these chains have been running in speed?

MR. PIEZ.—Mr. Renold had one of these chains in operation on a motor car, and, as I remember it, this car made 30,000 miles in which the chain ran 2200 feet per minute. He confines the use of the chain to places that are free from grit and dirt. The ordinary service on automobiles is very severe, and with the silent chain it is necessary to use a chain case to inclose the wheels.

MR. SPACKMAN.—Then if these chains would be exposed to dirt and grit the internal wear would be too great?

MR. PIEZ.—No, not on that account. The teeth have a tendency to fill up. You see, the tooth space here is the shape of an inverted wedge, and there is no tendency to crowd the material out sideways.

MR. SCHERMERHORN.—Are the pintles of the chains of steel?

MR. PIEZ.—Yes, hardened steel. The early tendency was to secure durability

by increasing the hardness—the skin hardness—of the material, and not by increasing the bearing surface. The attempts recently, however, have been toward the increase of bearing surface, and that is evidenced by the progress made in the chain. This, for instance, represents the first chain which consists of a series of flats. In this chain, which represents the last type, he has materially increased the bearing surface.

VARIATIONS AND USES OF THE STANDARDS OF MEASUREMENTS EMPLOYED IN FIELD ENGINEERING.

BENJAMIN FRANKLIN.

Read February 16, 1901.

To the inexperienced the art of measuring appears so simple a matter as to require no special knowledge or skill. Indeed, it is doubtful whether even among engineers of high standing there are not some who fail to appreciate the importance of this subject.

A somewhat varied experience has led us to the conclusion that the methods and principles governing practical and accurate measuring can not be too carefully studied by every engineer.

In this discussion the subject naturally divides itself into two heads: first, the differences in standard; second, the mechanical inaccuracies.

The extent of variation referred to in the first of these divisions is a surprise to those members of the profession who are not familiar with municipal work. For instance, the United States foot is not recognized as a standard in the work in any of the survey districts of Philadelphia.

What is known as the Philadelphia standard is an excess of 0.25 foot for each 100 feet in United States measure. But the Philadelphia standard itself, however, is not constant. In one district the allowance is 0.08 inch per 100 feet; in another, 0.13 foot; in another, 0.17 foot; in others, 0.25 foot and 0.27 foot. Sometimes two or more variations occur in a single district, and in one instance which came under our notice an architect calling for a plan, United States standard, found that each side of a quadrangular lot had a standard of its own, none of which corresponded to any of the above figures.

In the further pursuance of this investigation, the writer some time ago entered into correspondence with the engineers of the principal cities of the United States. As far as could be ascertained, with the exception of Boston and New York, Philadelphia practice is followed nowhere else in this country. In Boston the variation ranges from

0.014 to 0.02 per 100 feet. In New York city and Brooklyn the conditions are similar to those prevailing here, although probably not to the same extent. In these places there are two recognized standards: the old Dutch measure, which is 0.1 foot longer in each 100 feet; and one that was introduced later, in which the excess is 0.017 foot for the same distance. As, however, it is the custom there to establish a separate standard for each block from the old monuments found on the ground, it is, of course, evident that the recognized local standards themselves are subject to considerable variation.

It is unnecessary to dwell long on the confusion and frequent embarrassments which an unscientific system of this character entails.

In any large steam railroad operation within the city's limits, where railroad engineers who use United States standard only have to work in conjunction with the district surveyors, using their several standards, there must certainly be a conflict of methods and a liability to error before final results can be reached.

Again, it is easy to conceive instances in which bridges and buildings might be designed by parties unfamiliar with local conditions; and costly and irritating delays occur through the furnishing of plans whose dimensions are in city standard.

It is in many cases difficult to trace the causes for such a variety of standards. One may be found in the desire of the early surveyor to give "good measure." Even the modern surveyor is not entirely lacking in this generous impulse, for we have found a tract, easily seen from Penn's Tower, laid out within the last twenty years, where one inch in every fifty feet was allowed for this purpose.

Moreover, there is no question but that the measures used by the colonies before the Revolution were almost entirely those of England, and they continued so, without being specially legalized, for some years after that period.

The old British standards about the year 1740 were as follows: The standard English perch was $5\frac{1}{2}$ yards; the standard woodland perch was 6 yards; the church land measure perch was 7 yards; the forest measure perch was 8 yards; the plantation perch was 7 yards; the Scotch perch was $6\frac{1}{6}$ yards. It is, of course, fair to presume that in the early surveys of this country some one, or even all, of these standards were used.

We believe, however, that many of the original surveys, especially

those of towns, were made with the English standard perch of $5\frac{1}{2}$ yards, with an allowance for broken and forest land. This is supported by the statements of old surveyors, who tell us that the chains of our forefathers were made one inch longer for each two rods of length.

In the instructions given in 1881 to United States deputy surveyors, the designated length of chain for use in township and subdivision surveys is 66.06 feet. The object in adding the 0.06 is to correct for "sag" with a pull of twenty pounds. These chains are tested with a fixed standard each working-day.

In leaving this branch of the subject, the question naturally suggests itself, Is there no remedy for a practice which is certainly unscientific and possibly illegal?

In the consideration of the second division of the subject, the discussion relates only to accuracy in measurement.

It has seemed to the writer that two points ought to be borne in mind by every engineer in his practice: The first is to know when to be accurate; the second is, regardless of the degree of accuracy, to always check results.

The care, nicety, and refinement absolutely essential in measuring base-lines for primary triangulation or city block distances are unnecessary in many kinds of field engineering; but while the relative accuracy of the work may vary, the need for checking is constant.

There are four well-known appliances used in making measurements: First, the rod; second, the chain; third, the steel tape; fourth, the stadia wires.

The rod is so rarely used now in ordinary measurement that we will eliminate it entirely from this discussion.

It is said that the first chain made in accordance with an act of Congress was manufactured by David Rittenhouse, of Philadelphia, in 1797. It was of double links, and was 33 feet long.

The old chain of 66 feet and the later chain of 100 feet have until recently been used almost entirely in making land and railroad surveys; but they are now being generally discarded, and another generation may know them only by tradition. It is necessary to enumerate a few only of their defects.

Thus in a 100-foot chain there are 600 points of contact; according to Professor Johnson, 800. Again, it is estimated that, for a chain

100 feet long, in order to overcome the "sag" a pull of 60 pounds is necessary. When we add to these not only the errors characteristic of every measuring instrument, but also those peculiar to the chain itself,—such as the flattening, opening, stretching, kinking, and bending of rings,—we can readily conceive what basis the old surveyors had for their alleged practice of shortening a chain every second or third day when in continuous use. Yet as late as 1880 the "Engineering News," in an article from Professor Jackson, states that steel tapes are only slightly more accurate than common land chains.

In the discussion of steel tapes we reach a very important division of this topic. Under this head we include not only the graduated tape of the Chesterman type, but also the narrow band or flat wires.

Chesterman invented his tape about 1842, but there is no record of its use in this country earlier than 1860. At the present time both the tape and the wire are employed for any variety of measurement, and when skilfully handled, afford results that are wonderfully accurate and inexpensive.

For ordinary practice 100 feet is the accepted length of tape. Better results in good country, and for accurate base-line work especially, have been obtained with a tape 300 feet long. Five-hundred-foot tapes are not uncommon, but, in the writer's judgment, no real economy of time results from their use.

In a very broad sense the errors which are liable to occur in any measurements may be divided into two not very clearly defined classes: The first, the cumulative, depending directly upon the tape itself, its possible constant variation from a standard, and the number of times it is used; the second, the accidental, arising from causes whose effects can not be estimated; errors from which increase as the square root of the length of the line measured.

Where accuracy is required, science and skill can eliminate the second class, and make the appropriate adjustments for the first. In the determination of absolute results by the use of steel tapes, it is necessary that the following constants be determined for each tape: First, its absolute length at a given temperature; second, its coefficient of expansion; third, its modulus of elasticity. These constants must be known in order that "sag" and temperature may be corrected, as in them are found the chief causes of inaccurate work.

Many engineers meet the question of sag in a very simple fashion,

their thought being that to "pull hard and steady" is all that is required for correction. It is not an uncommon sight to see two strong, experienced chainmen, while measuring, engaged in a "tug of war" in an effort to straighten out the tape. The only strain that a suspended steel tape requires is "normal tension"; that is, a pull of sufficient strength to overcome the loss of length due to "sag." This depends upon the cross-section as well as the length of the tape between supports; and for very accurate work, the exact amount must be found for each tape by actual comparison with a standard. This "normal tension" varies from 6 to 16 pounds for a tape 100 feet long. The usual amount for a tape of that length, weighing 12 ounces, is a trifle less than 12 pounds. Practical men, however, recognize that while this tension is sufficient for accurate results obtained under the most favorable conditions, ordinary work requires a pull somewhat stronger in order to allow for those influences which are encountered in an average daily practice. This gives rise to what is known as a "working pull," which ought to range from 18 to 20 pounds per 100 feet, but as actually used is higher than this, frequently 25 or 30 pounds, and on side hill work reaching as high as 40 pounds.

In the work of the Missouri River Commission, on base-line measurements, the tapes used were 300 feet long, with a cross-sectional area of 0.003 square inches. The points of support were 30 feet apart, and the "normal tension" only 16 pounds.

Conditions remaining the same, when the strain in a 100-foot tape is raised from its "normal tension" of 12 pounds to a pull of 20 pounds, its length is increased 0.022 foot. Thorough knowledge of this one point could explain many errors that have been deemed accidental.

In the treatment of temperature we reach the most important influence which affects the variation from standard in a steel tape. This correction is by far the most difficult to make, for the tape is extremely sensitive, and responds to changes of temperature more quickly than the average thermometer. It is affected by almost everything upon which it rests. A grassy meadow, a brick or asphalt pavement, an open road or a shaded pathway, all create changes in its length which even a delicate attached thermometer fails to indicate. Tapes in the sunlight are much warmer than the surrounding atmosphere. On a clear or windy day, or when the air and ground differ in temperature

many degrees, it is impossible to obtain accurately the variations of the tape. For these reasons it has been found that still, cloudy days, or days on which there is a light drizzling rain, give very favorable results, while the utmost possible accuracy has been obtained by making measurements on quiet calm nights. Steel tapes are standardized at 62 degrees Fahrenheit, which Professor Johnson thinks is too low. He recommends 80 degrees instead, since most of the practical work is done in warm months and in good weather.

It is not necessary to dwell here upon the methods for determining temperature correction, as they are treated at length in all standard works on surveying. In Philadelphia some of the survey districts arbitrarily make an allowance of 0.02 foot for each 100 feet as a temperature correction, deducting that amount in summer and adding it in winter. A more scientific method is to attach one or more delicate thermometers to the tape, and make an actual allowance of 0.01 foot in 100 feet for each 16 degrees variation from the standard of 62 degrees.

It is to be greatly regretted that engineers, in this country at least, do not make a more general use of stadia. Except where a degree of accuracy is required that is to be checked by a mathematical calculation, we know of no method of measuring that gives more satisfactory results. Quick, reasonably accurate, economical, and adapted to every kind of country, the method has advantages which ought to appeal alike to the practical and scientific training of every engineer. In our own practice we employ this method constantly, with an ever-increasing confidence in its usefulness. For preliminary topographical work it is unequaled, a fact to which our attention was called by an illustration under our personal observation: A competitive railroad survey was made in a very rough mountainous country by two parties, one employing the usual method and the other stadia. The saving by the latter method in time and men was fully 50 per cent.; and the tracings of the two surveys, drawn to the same scale, when compared, showed no practical difference.

Gribbie states that in making a railroad survey of the gorges of Hawaii it was found that neither triangulation nor chain surveying could afford as great a degree of accuracy as stadia, and in rapidity there was no comparison. Our own experience in locating the outlines of marshes and the low-water mark of tidal bodies corroborates this testimony.

The limit of error allowed in the measurement of base-lines for primary triangulation is 1 in 1,000,000, affording us the highest standard of accuracy. This standard was reached by Professor Ed. Jæderin, of Stockholm, by tape-line measurements, although he eliminated the temperature error by using simultaneously two tapes of different metals.

In the "American Society Proceedings" for 1893 an instance is given where the degree of accuracy reached is 1 in 759,000. The tape used was 300 feet long; the length of the line, which was the base for a secondary triangulation, was 6663 feet. No measurement was made in the sun.

On the Missouri River Survey, with a length of a base of 9870 feet, with a tape 300 feet long, the greatest degree of accuracy attained was an error of 1 in 533,000. This line was measured at night.

For city work with spring balance and thermometer attachments, a minimum error can be reached of 1 in 40,000. When, however, the sag and temperature are both estimated, the error averages about 1 in 5000.

To one unaccustomed to the use of the stadia, its accuracy is surprising.

In the "Proceedings of the Boston Society of Civil Engineers" for October, 1893, in describing a new prismatic stadia attachment, Mr. Robert H. Richards states that in sights varying from 2000 feet to 3000 feet the error ranges from 0.02 to 0.1 of 1 per cent.

In Europe, with delicately constructed instrument, skilfully handled, spider web attachment, the error averages 1 in 2000.

On the United States Lake Survey for 1875, with lengths of readings varying from 400 feet to 650 feet, the error was from 1 in 1200 to 1 in 1500.

We have found that, with care, a Philadelphia rod will give an accuracy of 1 in 1000, sights not exceeding 600 feet in length. On rapid work, however, the error averages about 1 in 650.

At this date it is difficult to obtain any knowledge concerning the accuracy of the old chain measurements. Burt states that the average error in surveying by chain the public lands of the United States was 1 in 500; frequently the error was 1 in 220, and, under most favorable conditions, 1 in 1600.

On the Northern Pacific preliminary railroad survey the error was 1 in 1000.

Seventy miles of the finished track of the Illinois Central Railroad were measured by chain in 1885, and showed an accuracy of 1 in 2360. The conditions here were most favorable, and the results can be taken as the highest standard that can be attained by the chain method.

DISCUSSION.

MR. FRANKLIN.—I beg to express my thanks to Mr. J. O. Clarke for the use of a diagram that he has especially prepared for this paper, showing the relation of sag and stretch. Will Mr. Clarke kindly explain what he has done in connection with the diagram?

J. O. CLARKE.—My attention was first drawn to the subject in beginning work on the revision of the city plan in Germantown, in 1896, and the first thing I wanted to find out was the proper pull for a tape. Nobody seemed to be able to tell me. The tension used by different engineers varied from 20 to 40 pounds. On going over the subject in Professor Johnson's book on surveying, I found that his diagrams were not platted exactly in accordance with the figures given in the table, and that the results for very heavy pulls had not been computed. My first results were obtained by the use of the equation of the catenary, but the calculations were very laborious, and later the equation of the parabola was used. Within reasonable limits—that is, near the point of normal tension—there is no appreciable error from the equation of the parabola; and for heavy pulls where the error from sag is very slight, it is practically more exact than the catenary, unless logarithms to more than seven places be used. The parabola is much easier to work with, because the error from sag varies directly as the cube of the span and inversely as the square of the pull. The errors from sag were tabulated for tapes weighing $\frac{3}{4}$ of a pound per 100 feet, for lengths from 25 feet to 300 feet, and for pulls of from 1 pound to 50 pounds. These errors were platted for a total measurement of 1000 feet, and the plus error from stretch for 1000 feet of tape was then computed and platted. The point where the curve of sag error is crossed by the line of stretch error gives the normal tension for that particular tape length, and the ordinate between the two, below or beyond the point of normal tension, gives the plus or minus error for that pull.

The results are curious. The normal tension for an ordinary tape is between 11 and 12 pounds, while the minus error for a pull of 20 pounds is 0.024 per 100 feet. A pull of 12 pounds was adopted as being the nearest practical pull for normal tension. The work could not be done at night, and it was impossible to wait for the most favorable weather—cloudy days. A slight breeze of 5 miles an hour will nearly make up the difference between a pull of $11\frac{1}{2}$ and 12 pounds, because the tape is very susceptible to light winds at that tension.

To convince practical men, who did not credit the results of the calculations, I compared two measurements of a line, made under exactly the same conditions and on the same day at 12 and 20 pounds tension. Under 12 pounds the measurement was 2241.593 feet. With 20 pounds, the length was 2241.051, and, reducing this 0.024 per hundred, the length at 12 pounds should be 2241.589—

a difference of less than $\frac{1}{100}$ of a foot. The actual error, then, in that distance was 0.538 and the measurements were made under precisely the same conditions. With a 35-pound pull the error for 1000 feet is 0.535, and that is not an unusual pull.

In another series of measurements, on a line 3600 feet long, the difference

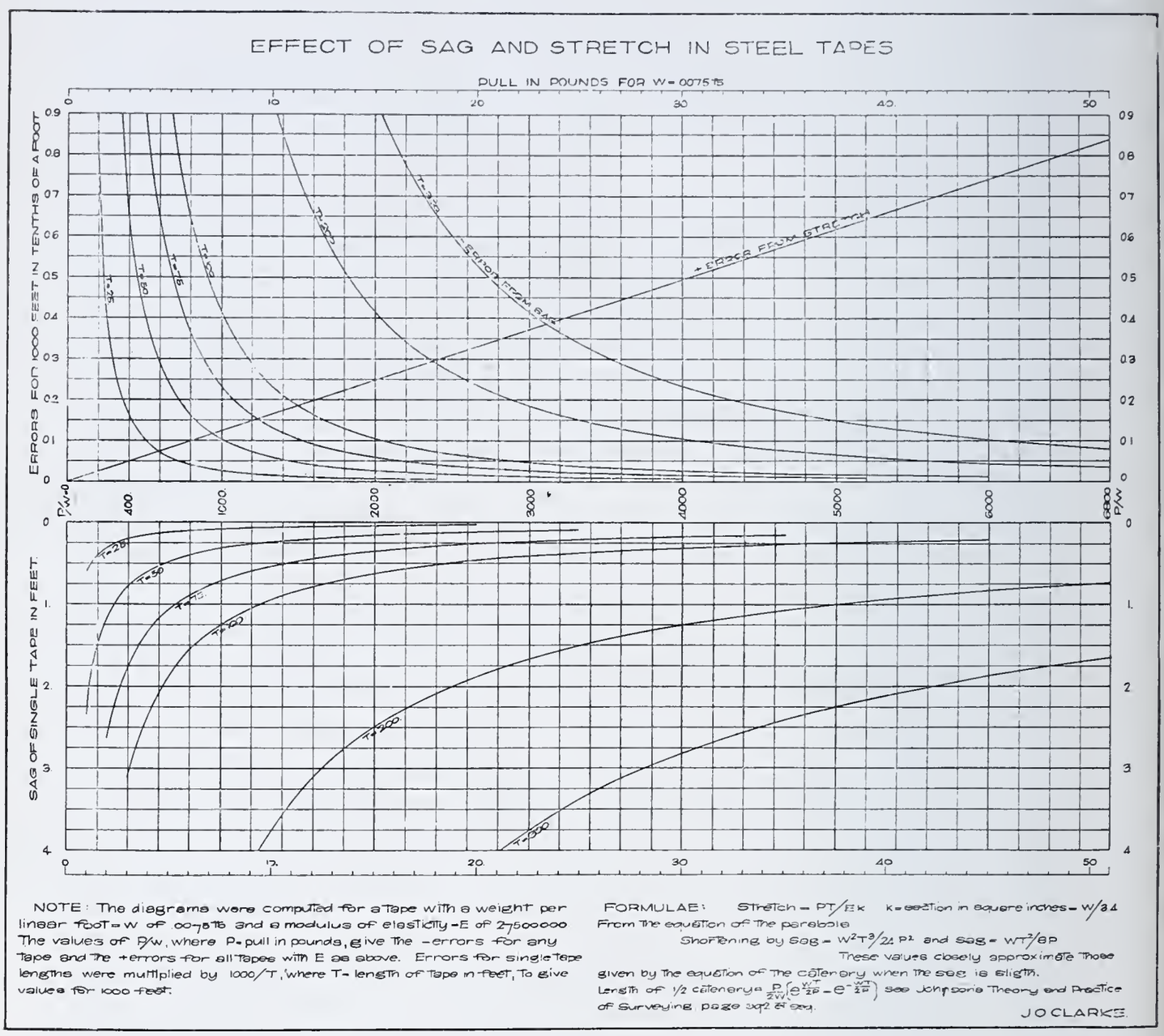

FIG. 1.

between the reduced and actual measurement was about 0.14, but the conditions were not identical and the wind was most too high for a 12-pound pull.

In measuring, the tape was lined up with the transit and leveled with a hand-level. The head chainman ran the spring balance and I set the points myself. All measurements were gone over twice, the old points being destroyed and relocated for the second reading. The difference between the two on the same day and under the same conditions was hardly noticeable.

MR. BLOCH.—I have a record of a few tests of a Chesterman tape, made by the United States Government, of a tape under three different tensions. I might say that a Chesterman tape seems to be about 0.01 of a foot too long, from the United States standard measurement, and that every Chesterman I had tested by the United States Government always resulted in 0.013 or 0.015 of a foot when reduced to 60° temperature. The Chesterman tape would be correct at about 48° or 45°, according to the tape, at a pull of 10 pounds. These values are given at 62° by the United States Government. This tape was tested at different tensions. At 10-pound tension it was plus 0.013 of a foot, at 20-pound tension it was plus 0.034 of a foot, and at 30-pound tension it was plus 0.052 of a foot. It increases as the tension increases.

MR. CLARKE.—Have you the weight of the tape tested?

MR. BLOCH.—No; it was an ordinary Chesterman. I don't know how much it weighed.

MR. CLARKE.—The tapes we had tested gave the result of 0.013, and the stretch for a 10-pound pull was about 0.0165.

MR. BLOCH.—That shows that the Chesterman tape was stretched about half an inch by an additional pull of 20 pounds—the difference between 10 pounds and 30 pounds.

MR. CLARKE.—It might be interesting to compare those figures with the results from this table. The stretch for 10 pounds is 0.016; the stretch for 20 pounds is about 0.033; and for 30, about 0.049. They correspond very closely. The Bureau of Weights and Measures never made any correction for pull, and they always said that the tape was reduced to 62° with a pull of 10 pounds, and that is close to 0.016.

MR. BLOCH.—They will test it at any pull that is desired.

MR. CLARKE.—Practically the tape would be all right at 62° under a 12-pound pull.

MR. BLOCH.—A Chesterman tape?

MR. CLARKE.—Yes; it ought to, if it weighs about the same as the Eddy tape.

MR. BLOCH.—With 10 pounds it is almost a hundredth too long.

MR. CLARKE.—Yes; but when you measure, you have the sag to counteract that, which amounts to 0.021. Here is the sag, minus 0.021, so that the tape would be eight-thousandths short with a pull of 10 pounds. With a pull of 12 pounds the two equalize. I could not understand at first why the tape was 0.013 longer, but on looking at the diagram I found that it was the stretch due to a 10-pound pull.

MR. BLOCH.—The deeds in the city of Philadelphia are all located from street corners, in general, according to district standards, and the fronts are in district standard, and all these records have accumulated for years; the properties would have to be reconveyed and an entire new system adopted; so I think a judge would hesitate a long while before he would upset the standard.

WALTER BRINTON.—I do not know that I have anything new to offer. I have been very much interested in the technical part of the discussion and in

Mr. Clarke's figures. I think that is a very interesting study; but I wish to say that my experience with young men in measuring and surveying, leads me to believe that the best measurers that I have come in contact with are men who know nothing about the modulus of elasticity or the catenary curve of a steel tape-line. It is a matter which must come to the man as he goes along with his work. That is, I mean to say that the young man who goes out in the morning to make a survey with his tape-line dragging along in the ice and snow, if he is a man of experience, will know how much allowance to make; and if it is dragging along in summer-time on hot pavements, his own experience will teach him how hard to pull. As I said before, the best surveyors with whom I have come in contact are men who get this information from practical experience rather than from the text-books.

One word as to the city standard: I can easily see how a person who has not been familiar with the plan in the city measurements can wonder or be perplexed to know how a city the size of Philadelphia, in which surveying has been carried on for so many years, has not been liable for more actions in law over those measurements; but it was a measurement that was established here when William Penn first laid out the city, and Thomas Holmes, his surveyor, used this measurement, and the same standard measurement has been continued as the city has advanced and new sections have been laid out. I have never known, in twenty years' experience, of any complications arising from the fact of the city standard differing from the regular United States standard measure.

John C. Trautwine, Jr.—I have nothing to contribute to the discussion, but what has been said about the pulls in steel tapes, and the corresponding deflections, reminds me of the unconscious rhyme made by some noted authority —Whewell, I believe: "There is no force, however great, can stretch a cord, however fine, into a horizontal line that shall be absolutely straight."

Mr. Nichols.—I would like to ask one question—with regard to the city standard. Are we to understand that these original measurements were purposely measured 3 inches longer for each 100 feet, or was it merely an accident? Are there any records established showing that it was purposely measured those lengths—any records that check up and show that it was according to a standard? Now, with regard to this 50-foot or lot front, whatever it may be—I have had a little experience in measuring corners and lots from original surveys where I have found the original corners as established, and I have found very few but where there was either a shortage or an overplus in length. Of course, in a case of that sort, where the intermediate points are not established, we simply apportioned it up.

Mr. Schumann.—Did I understand Mr. Franklin to say that the rod is now obsolete? Of course the rod is still used to measure base-lines.

Mr. Franklin.—I am under the impression that it is very rarely used now. I desire to state, with regard to the former use of the measuring rod, that Mr. Fritz Bloch has a very interesting sketch in one of his calculation books, made in 1806, of the old type of trussed rod used for city measurements. Through

his courtesy, I had a photograph taken. The cut is taken from this photograph.

This cut represents the old form of measuring rod used in the city of Philadelphia in the early part of this century. It was photographed from a water-color sketch found in one of Mr. Bloch's calculation books, and bears the date 1806.

The rod is 20 feet long, and is divided into feet, with subdivisions of tenths and hundreths. It is provided with leveling attachments at the ends, and with an index and plumb bobs, so that the end of the line measured can be accurately taken off.

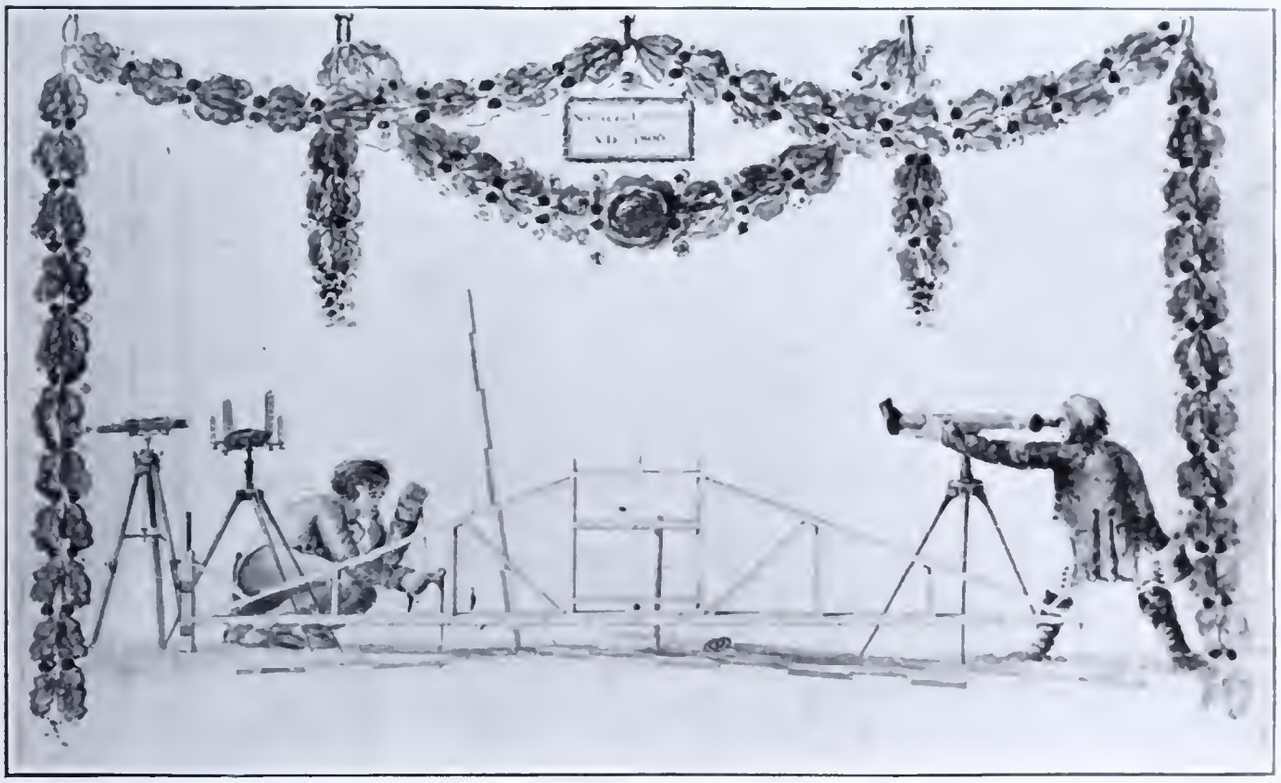

Fig. 2.

Grouped near the rod are the various surveying instruments in use at that date, such as the level, level and transit rods, and surveyor's compass.

Mr. Bloch states that in remeasuring the lines of that portion of his district in which this type of rod was used, he found the average error to be only 0.01 ft. per 100 ft., showing a high degree of accuracy for that period.

A Member.—Regarding the allowance in a hundred feet; in New York, on any surveys, you have to allow 0.3 of an inch in a hundred feet. Some years ago we were settling the right of way of owners on the Pennsylvania Railroad, and the land was sold under that condition.

Mr. Bloch.—With regard to this matter of whether the standard was purposely made or whether it was due to an inaccuracy in the chain in Penn's time, I do not know that we have any records, but it was evidently so found when the United States standard was established. It was found that the standards in the

city measured longer than the United States standard about 3 inches in every 100 feet, and after that, as different sections of the city were laid out, that same standard of measurement was used, I suppose the idea being not to have one portion laid out in one standard and another in another standard. In different parts of the city now the general standard is about 3 inches in 100 feet, and in a good many districts that standard prevails throughout the whole district. I think it does in Mr. Webster's district.

Mr. Webster.—Pretty much.

Mr. Bloch.—Of course, there are at all times factors in a measurement so that you can not establish the accuracy entirely. You probably have to have an allowance of about two-hundredths to the hundred feet. Of course, as Mr. Franklin said, one can not judge the temperature of the tape; and no matter how accurate one may want to get it theoretically, yet no one can get it perfectly accurate practically. The temperature at which the measuring is done can not be obtained. All the work can not be done at night; that would not be a practical way of doing things, so things have to be done in a practical way; and it would not be practical to start using the United States standard in the city of Philadelphia, for the city plans are all made in district standard, and the deeds and lots are supposed to sum up to the block distances as given on the city plans, and if one started to vary any of them, endless confusion would result.

A Member.—Are the standards more uniform than the old?

Mr. Bloch.—Yes, more uniform. I am familiar with the districts using similar standard. Mr. Franklin said in one district it was 0.008. I do not know what district that is.

Mr. Franklin.—The allowances vary from 0.08 of a foot to 0.027 of a foot per 100 feet.

Mr. Webb.—They are all larger.

Mr. Clarke.—It seems to me there is a little misunderstanding about this question of pull. I don't think Mr. Franklin advocated a 12-pound pull for all measurements in all work. I think it ought to be about 20 pounds for rough work, and most work is done with a pull of about that amount.

Mr. Franklin.—I think a normal tension of 12 pounds is sufficient with favorable conditions. A reduction ought to be made for the pull of 20 pounds.

Mr. Bloch.—I think a pull of 12 pounds is the proper thing.

ABSTRACT OF MINUTES OF THE CLUB.

BUSINESS MEETING, January 5, 1901.—The President in the chair. Eighty-five members and visitors present.

The death of James S. Doran was announced.

Mr. Charles S. Gowen gave an informal lecture upon "The New Croton Dam, New York," illustrated with lantern reproductions of drawings and views of the work. The subject was discussed by Messrs. Schermerhorn, Birkinbine, Hill, Webster, and others.

The Tellers reported the election of Messrs. Horatio A. Foster, John V. Rice, Jr., Chr. J. Steen, N. J. Witmer, and Augustus Wood to active membership, and Messrs. Alan Corson and W. Purves Taylor to junior membership.

ANNUAL MEETING, January 19, 1901.—The President in the chair. Eighty-two members and visitors present.

The death of P. C. F. West was announced.

The annual report of the Board of Directors and that of the Treasurer were presented, the latter containing an addition of the certification of the Auditors as to its accuracy.

In accordance with the requirements of Article VII, Section 2, of the By-Laws, the Treasurer reported the names of one associate and six active members stricken from the rolls on December 31, 1900, for arrears in dues to the Club.

Professor Edgar Marburg, retiring President, presented a paper upon "Nineteenth Century Engineering: Its Evolution and Something of its Beginnings in America."

The Tellers reported the election of the following officers for 1901: *President*, Henry Leffmann; *Vice-President*, Edwin F. Smith; *Secretary*, L. F. Rondinella; *Treasurer*, George T. Gwilliam; *Directors*, Silas G. Comfort, Minford Levis, and W. B. Riegner.

The retiring President thanked the Club for the assistance which he had received in performing his duties during the past year, and congratulated the members upon the healthy condition shown by the annual reports.

BUSINESS MEETING, February 2, 1901.—The President in the chair. Seventy-two members and visitors present.

Mr. Charles Piez read a paper upon "Chains and Chain Gearing." The subject was discussed by Messrs. Spackman, Schermerhorn, and others.

The Tellers reported the election of Messrs. Charles F. Knight and Frederick Transom to active membership, and Messrs. H. E. Ehlers and Owen Brooke Evans to junior membership.

REGULAR MEETING, February 16, 1901.—The President in the chair. Sixty-six members and visitors present.

Mr. Benjamin Franklin read a paper upon "Variations and Uses of the Standards of Measurements Employed in Field Engineering," and Mr. A. V. Hoyt presented a paper upon "Criticisms on the Art of Land Surveying, as Followed by Civil and Mining Engineers." The general subjects of land measurement and of the relative advantages of theory and practice were discussed by Messrs. Clarke, Bloch, Webb, Brinton, Trautwine, and others.

REGULAR MEETING, March 2, 1901.—The President in the chair. Seventy-nine members and visitors present.

Mr. F. Lynwood Garrison delivered an address on "Some Notes in China by an American Engineer," in which he described, with the aid of lantern illustrations, some of the observations which he had made during a recent visit to China.

REGULAR MEETING, March 16, 1901.—The President in the chair. Seventy-seven members and visitors present.

Mr. John C. Trautwine, Jr., presented a paper, "The Queen Lane Reservoir, Philadelphia," this being the last of a series of papers on the Queen Lane Division of the Waterworks of Philadelphia which were prepared for the Club by present or former officials of the city's Bureau of Water.

ABSTRACT OF MINUTES OF THE BOARD OF DIRECTORS.

SPECIAL MEETING, January 5, 1901.—Present: The President, the Vice-Presidents, Directors Levis, Sonder, Christie, and Smith, the Secretary, and the Treasurer.

The Treasurer's annual report was received and adopted for presentation to the Club.

The Chairman of the Executive Committee presented the annual report of the Board of Directors, which, after slight amendment and the addition of an itemized classification of monthly expenses for the year 1900, was accepted for publication.

Upon motion the chair appointed the Treasurer and Chairman of the Finance and House Committees as a special committee to prepare a statement of the Club's assets and liabilities to be appended to the annual report, and the Chairman of the Executive Committee was authorized to have the annual reports of the Board of Directors and the Treasurer and the statement of assets and liabilities printed, to be mailed to each member with the next meeting notice.

REGULAR MEETING, January 19, 1901.—Present: The President, the Vice-Presidents, Directors Souder, Christie, Piez, and Smith, the Secretary, and the Treasurer.

The Treasurer's report showed:

Balance, November 30, 1900,	$769.48
December receipts,	1141.31
	$1910.79
December disbursements,	827.44
Balance, December 31, 1900,	$1083.35

At the suggestion of the Secretary, he was authorized to add a foot-note to the minutes of December 15th explaining that the balance, November 30th, therein reported, did not include $200 set aside at three per cent. interest.

The question of readjusting the selling prices for back numbers of our "Proceedings" was referred to the Publication and Library Committees for their joint action.

ORGANIZATION MEETING, January 26, 1901.—Present: The President, the Vice-Presidents, Directors Christie, Piez, Comfort, Levis, and Riegner, the Secretary, and the Treasurer.

The President stated that the election of Mr. Smith to the Vice-Presidency created a vacancy for a Director to serve until January, 1902. Mr. Charles Hewitt was thereupon nominated, and upon motion the Secretary cast the ballot of the Board for his election.

The President announced the following standing committees for the year 1901, the first-named in each case being chairman:

Finance: Messrs. Smith, Levis, Riegner.
Membership: Messrs. Piez, Comfort, Hewitt.
Publication: Messrs. Comfort, Schermerhorn, Piez.
Library: Messrs. Christie, Riegner, Hewitt.
Information: Messrs. Schermerhorn, Christie, Hewitt.
House: Messrs. Levis, Smith, Riegner.

The matter of increasing the salary of the office clerk, which was referred with a favorable recommendation by the out-going Board, was considered, and upon motion the salary of Mr. Fred'k W. Myers was fixed at $70 per month from January 1, 1901, with the understanding that he will also act as Librarian.

Tellers of Election are as follows: Messrs. Osbourn, Loomis, Devereux, Hubbard, Head, and Bradley.

Auditors for 1901: Messrs. Dallett, Spangler, and Humphrey.

The Treasurer was authorized to deposit $500 more of the Club's cash balance in the West End Trust Co. at three per cent. interest.

Regular Meeting, February 16, 1901.—Present: The President, the Vice-Presidents, Directors Christie, Hewitt, Comfort, Levis, and Riegner, and the Secretary.

The Treasurer's report showed:

Balance, December 31, 1900,	$1083.35
January receipts,	1832.75
	$2916.10
January disbursements,	421.83
Balance, January 31, 1901,	$2494.27

The Finance Committee reported the following requests for appropriations from standing committees for the year 1901; and upon motion the amounts were appropriated, one-half to be available before August 1st:

House Committee,	$3110.00
Publication,	1000.00
Library,	100.00
Information,	100.00
Salaries,	1140.00
Office Expenses,	450.00
	$5900.00

Regular Meeting, March 16, 1901.—Present: The President, Vice-President Smith, Directors Christie, Piez, Hewitt, Comfort, Levis, and Riegner, and the Secretary.

The Treasurer's report showed:

Balance, January 31, 1901,	$2494.27
February receipts,	569.25
	$3063.52
February disbursements,	530.90
Balance, February 28th,	$2532.62

ADDITIONS TO GENERAL LIBRARY.

FROM STATE BOARD OF HEALTH, BOSTON.

Report upon Discharge of Sewage into Boston Harbor, 1900.

FROM COMMISSIONER OF PATENTS, WASHINGTON.

Annual Report, 1899.

FROM CHIEF OF BUREAU OF STEAM ENGINEERING, WASHINGTON.

Annual Report, 1900.

FROM WAR DEPARTMENT, WASHINGTON.

Annual Report of Brigadier-General Wm. Ludlow, U. S. Army, July 1, '89 to May 1, 1900.

FROM TREASURY DEPARTMENT, U. S. COAST AND GEODETIC SURVEY.

The Transcontinental Triangulation and the American Arc of the Parallel.

FROM BOSTON TRANSIT COMMISSION.

Sixth Annual Report, August 15, 1900.

FROM UNIVERSITY OF PENNSYLVANIA.

The Provost's Report, August 31, 1900. Catalogue, 1900–'01.

FROM BENJ. SMITH LYMAN, PHILA.

A Geological and Typographical Map of the Shippen and Wetherill Tract, Schuylkill County, Pa., Benj. Smith Lyman and A. D. W. Smith. Also pamphlets on Movements of Ground Water. Notes on Mine Surveying Instruments. Japanese Swords. Importance of Topography in Geological Surveys.

FROM AM. INST. MINING ENGINEERS.

February pamphlets, 1901.

FROM AM. SOCIETY CIVIL ENGINEERS.

Transactions, Vol. XLIV, Dec., 1900.

FROM AM. PHILOSOPHICAL SOCIETY.

Proceedings, Vol. XXXIX, No. 164, Oct.–Dec., 1900.

FROM U. S. GEOLOGICAL SURVEY.

Monographs, Vol. XXXIX. Bulletins, 163–176.

FROM CHIEF OF ENGINEERS, WAR DEPARTMENT, WASHINGTON.

Report, 1900, Parts 1–6.

From Smithsonian Institute, Washington.

Report, 1898.

From Liverpool Engineering Society.

Transactions, Vol. XXI, 26th Session.

From the Osborn Engineering Co., Cleveland, O.

Pamphlet: Abolishment of Grade Crossings, Report of Special Committee, Dec. 18, 1900.

From Illinois Soc. Engineers and Surveyors.

Fifteenth Annual Report, 1900.

From Patterson & White, Phila.

Club Directory of Philadelphia, 1901.

From Engineers' Society of Western New York.

Minutes of Meetings.

From Emil L. Nuebling, Reading, Pa.

Electrolysis of Water Mains. Report, Oct., 1900.

From U. S. Geological Survey.

Topographic Sheets, State of Penna.

From Arthur D. Marble, City Engineer, Lawrence, Mass.

Twenty-second Annual Report, 1899.

From Columbian Field Museum, Chicago, Ill.

Report Series, Vol. I, No. 6, 1899–1900.

From Geological Survey of Canada.

Relief Map of Canada and United States, 1900.

From Univ. of California.

Annual Report of Secretary to the Board of Regents, June 30, 1900.

From Nova Scotian Institute of Science.

Proceedings and Transactions, Vol. X, Part 2, 1899–1900.

From Engineers' Club of Cincinnati.

Secretary's Report for Year Ending Dec. 20, 1900. List of Members.

From M. G. Canet, Paris, France.

Discours de President Sortant. Societe des Ingenieurs Civils de France, 1901.

From Theodore A. Leisen, Wilmington, Del.

Report of Board of Park Commissioners, Wilmington, 1900.

From Am. Soc. Civil Engineers.

List of Members, 1901.

Editors of other technical journals are invited to reprint articles from this journal, provided due credit be given the PROCEEDINGS.

PROCEEDINGS

OF

THE ENGINEERS' CLUB

OF PHILADELPHIA.

ORGANIZED DECEMBER 17, 1877. INCORPORATED JUNE 9, 1892.

NOTE.—The Club, as a body, is not responsible for the statements and opinions advanced in its publications.

Vol. XVIII. JULY, 1901. No. 3.

THE PARKER STEAM GENERATOR.

A NEW TYPE OF WATER TUBE BOILER.

HENRY G. MORRIS.

Read April 6, 1901.

IN assuming that one has found out something new, it is well to examine into the state of the art before announcing to the world that a new discovery has been made; and with that intention in view, the writer has referred to N. P. Burgh's "Practical Treatise on Boilers," which, up to the time of its publication in 1873, gives drawings of about all the forms of boilers into which iron had been tortured.

In the portion of the work devoted to the water tube type no reference is made to any form in which the water is compelled to flow downward. It therefore seems that the form of boiler now presented has some justification for the claim of being a new type.

This is a straight tube boiler with a reversed circulation—that is, the water flows downward as it is heated instead of upward, and the steam is taken off at the bottom and discharged into a dry steam chamber where it is kept separate from the water. Superior economy is claimed for it on account of the flow of the water and the gases being opposite to each other, bringing the coldest gases in contact with the coldest tubes.

The design shown (Figs. 1 and 2) is for a 150 horse-power unit, having 1500 square feet of heating surface and 31.5 square feet of grate. There is a single drum 42 inches in diameter and 20 feet long, divided into

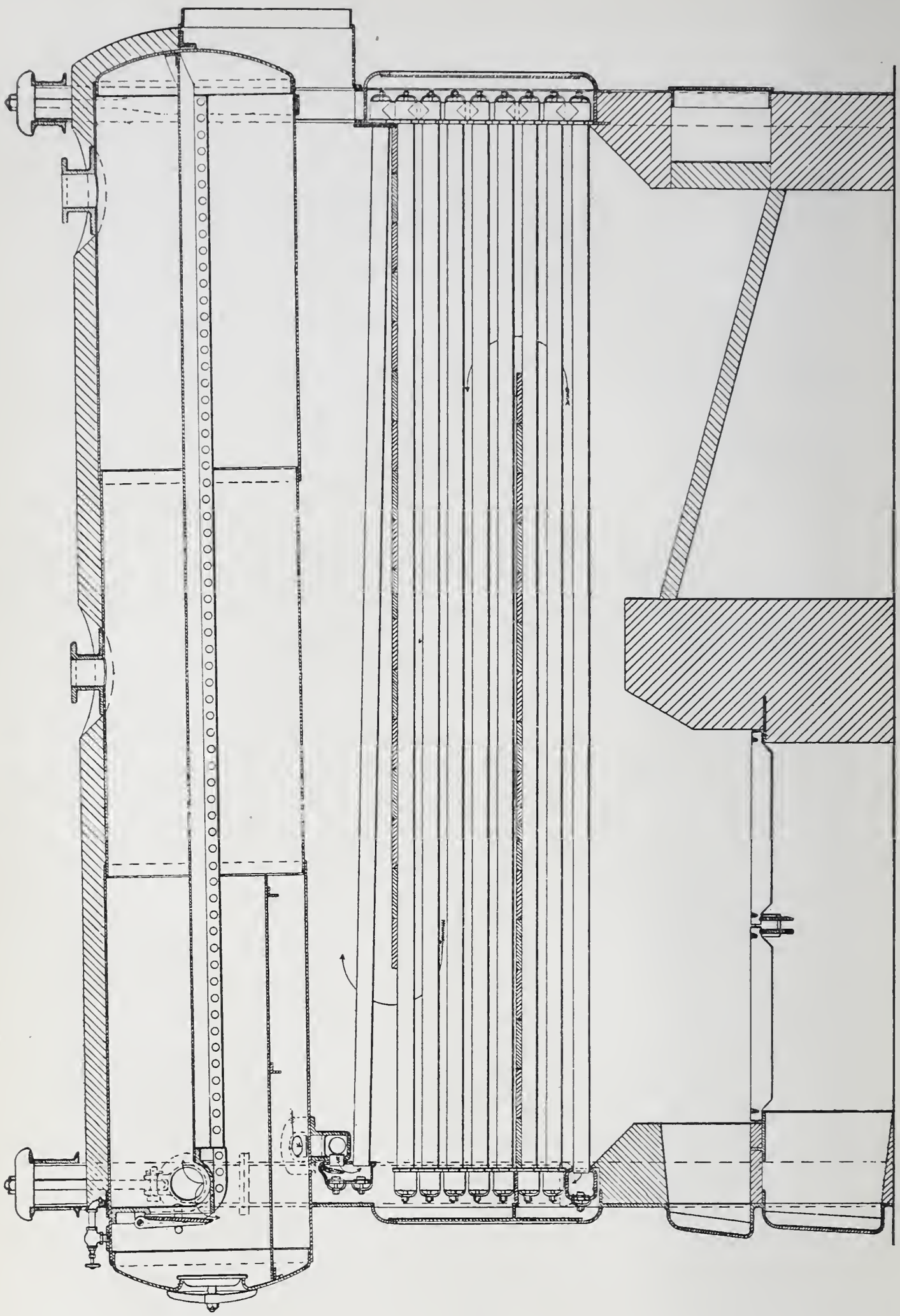

Fig. 1.—Longitudinal Section—One Drum Design.

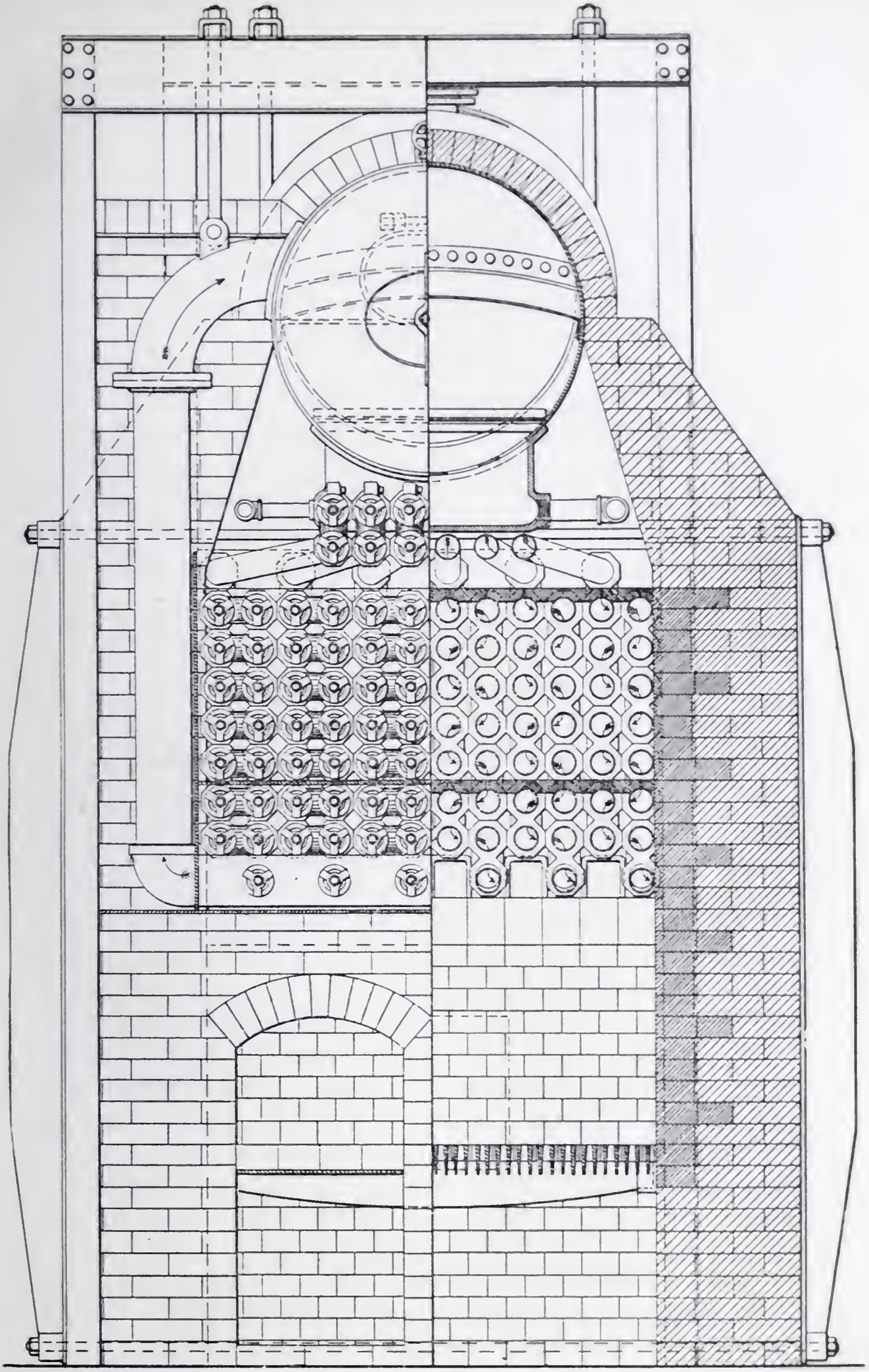

Fig. 2.—Sectional Elevation—One Drum Design.

upper and lower chambers, and 96 tubes 3 inches in diameter and 18 feet long. A steel plate or "diaphragm" divides the drum into two compartments. The rear end is fastened to the dished head, and the front end is attached to a casting, or steam space head, which has an opening 11 inches by 15 inches into the lower chamber, controlled by a swinging non-return valve. The valve can be lifted off, and the opening serves as a manhole. A small by-pass connects the steam space of the water chamber with the dry steam chamber.

The tubes are arranged in vertical groups, technically termed "elements," in such a manner as to form a number of flattened coils. The elements in this case are six in number, two tubes wide, and each consists of sixteen tubes expanded into malleable iron junction boxes which form the bends. The front boxes are horizontal, and those at the rear are vertical, the connections being so alternated front and rear that the whole sixteen tubes form one continuous passage for the water and steam from top to bottom.

The boxes have hand holes opposite each tube end, with inside ground jointed covers. The shape of the boxes leaves four openings $1\frac{7}{8}$ inches square around each tube for access to the soot and dust. The length of the tubes gives flexibility and the boxes can be separated at any point for the removal of a tube or the baffles.

The upper ends of the elements are connected by short nipples expanded into the vertical junction boxes and into the steel cross box which is riveted to the under side of the drum. A brass disc is suspended in each of these vertical boxes, in front of the nipple, and acts as a check against reversals of the flow. The lowest tube of each element is connected at the front end to a horizontal steel cross box, termed a steam collector, which delivers the combined discharge of all the elements through two upcast pipes to the dry steam chamber. A flanged steel elbow is riveted to each side of the drum just above the diaphragm, and the upcast at each front corner is connected to it by a flanged joint.

The front junction boxes rest on the steam collector, and the whole, including the drum, is suspended at the front end from the cross beams above in the usual way. At the rear end the drum is suspended from the cross beams, but has no connection with the tubes. The rear boxes rest on an angle bar fastened to the columns.

The baffles for directing the course of the gases are placed on the third and eighth rows of tubes; they consist of fire-brick tiles $1\frac{1}{2}$ by $4\frac{1}{2}$ inches by 9 inches, and are easily removed through the front.

The setting and front are of the usual brick and iron construction,

with large doors for access to the boxes both front and rear. The front nozzle is for safety valves, and the rear one is the steam opening. Mud plates or pans are placed at the front end of the water chamber over the openings into the cross box.

The openings between the boxes for access to the soot are shown, both front and rear, in the sectional elevation. A space will be noticed between the check boxes and the horizontal boxes; this is to permit the separation of the boxes in case of need. The dimensions, including 17-inch walls, are 7 feet 4 inches wide, 18 feet 10 inches long, and 12 feet high from the floor to the top of the drum.

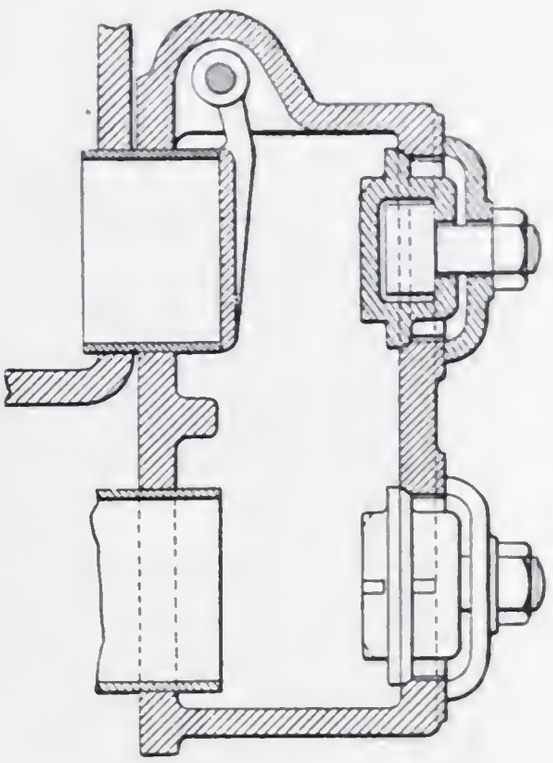

Fig. 3.—Section of Check Box.

A detail of the check box is shown in section (Fig. 3), illustrating the method of suspending the valve, and utilizing the end of the nipple for a seat. One of the malleable iron junction boxes was tested to 2150 pounds per square inch, and a capped tube was forced out of the hole into which it had been expanded, without any injury to the box. The tubes are not passed through the hand holes, which permits the use of a type of hand hole cover heretofore impracticable. The covers are circular, with conical ground seats, and are passed through the tube holes before the tubes are inserted. The tube holes are bored $3\frac{1}{32}$ inches, and the hand hole $2\frac{3}{4}$ inches, which allows sufficient margin for a perfect joint. The covers have guides turned to fit the bored hand holes, and it has been found safe to remove the bolt and spider and turn the cover to stop a leak while under steam pressure. To inspect a tube, the bolt and spider are removed, and the cover is passed toward the other end of the box. A group of malleable iron junction boxes is shown in Fig. 4.

The covers can not be interchanged, which insures the replacement of each upon the seat to which it has been ground. The covers are replaced after inspection without the necessity of cleaning the joints or using a wrench. After pressure is on, a slight turn with the grinding key brings a leaky cover to its seat without danger or waste of time.

When it is seen that all the joints are tight, the nuts are all screwed up sufficiently to prevent disarrangement.

In operation the water is fed into the drum or cross box, flows into the tubes and seeks its level in the upcasts and drum. The working level is from 2 inches to 12 inches below the diaphragm. When the fire is started the water is soon driven out of the upcasts by the expansion of the water into steam in the lower tubes. The result is a column of

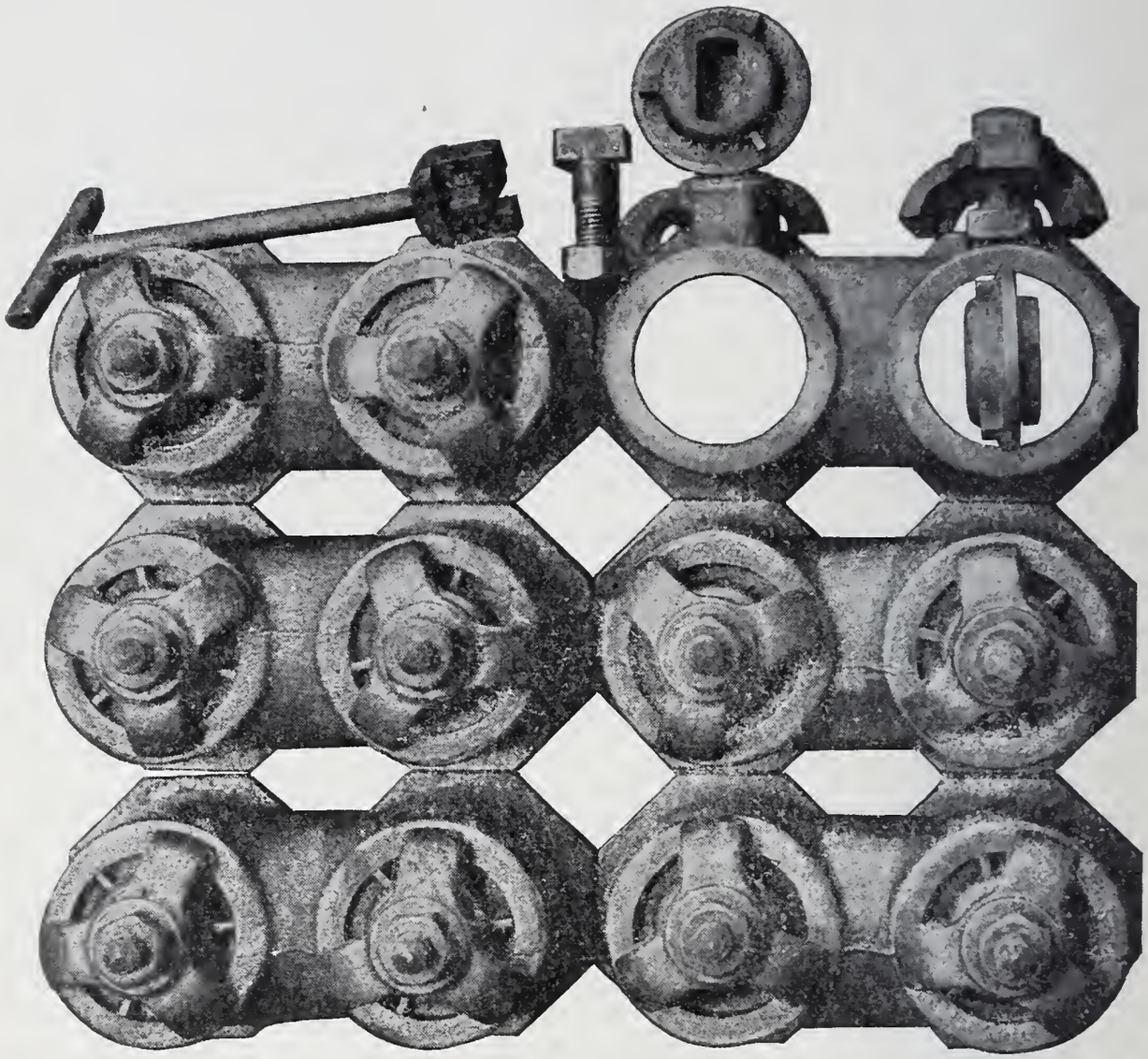

Fig. 4.—Junction Boxes.

water in the drum and tubes against a column of steam in the upcasts; the water flows rapidly downward, but is evaporated in its passage so that little or no water reaches the upcasts, and the flow is thus maintained as long as the fire is kept up. The flow is non-reversible owing to the non-return valve at the head of each element, and is most rapid in the lower tubes owing to the expansion of the water into steam. The length of the elements is proportioned to allow enough water to reach

the lower tubes to prevent overheating. Any water reaching the steam chamber drains at once into the water chamber.

When there is a sudden withdrawal of steam from the steam chamber the swinging valve closes and prevents priming, and the excess of pressure in the lower chamber serves to maintain the flow in the tubes, which would otherwise be affected by the lifting tendency. The by-pass prevents an excessive difference in pressure by allowing a restricted flow of steam from the water chamber to the steam chamber. The tubes can be flushed at will by closing the by-pass and causing a fall in pressure in the steam chamber.

The water carrying the sediment is discharged into the steam chamber, whence it drains into the water chamber as soon as the anti-priming valve reopens. The sediment is invariably found directly beneath the valve, where a connection is provided for blowing it out. A blow-off is also provided from the steam collector.

This boiler can be fired from both ends when floor space is limited or extra grate surface is needed. In a 500 horse-power double-ended unit the drum is 60 inches in diameter and 20 feet long. The elements are single instead of double, the boxes being vertical at both ends. The check boxes are connected to the cross box by a long tube instead of a short nipple. There are two grates, each 6 feet wide by 8 feet long, making 96 square feet of grate surface and 5000 square feet of heating surface on a floor space, including 17-inch walls, 8 feet 10 inches wide by 18 feet 10 inches long.

Where floor space is at a premium, a vertical design is used. The tubes in this case are 2 inches in diameter, and are divided into single vertical elements, each tube being 8 feet long and screwed into the rear bends which have no hand holes. A pair of tubes or a whole element may be removed through the front. There are 24 elements of 24 tubes each; the drum is 72 inches in diameter by 8 feet 6 inches long; there are 48 square feet of grate surface and 2500 square feet of heating surface. The dimensions outside the walls are 8 feet 10 inches wide by 8 feet 6 inches long, or 75 square feet, and the height is 17 feet. This gives $3\frac{1}{3}$ horse-power to each square foot of floor space. Access is had to every part of this boiler through the front.

A boiler of the two-drum design has been in daily service at Roach's Shipyard at Chester, Pa., since April 11, 1900.

The drawing (Fig. 5) shows that it differs from those described in having separate drums for the water and the dry steam, and independent upcasts for each element at the rear. The lower drum is

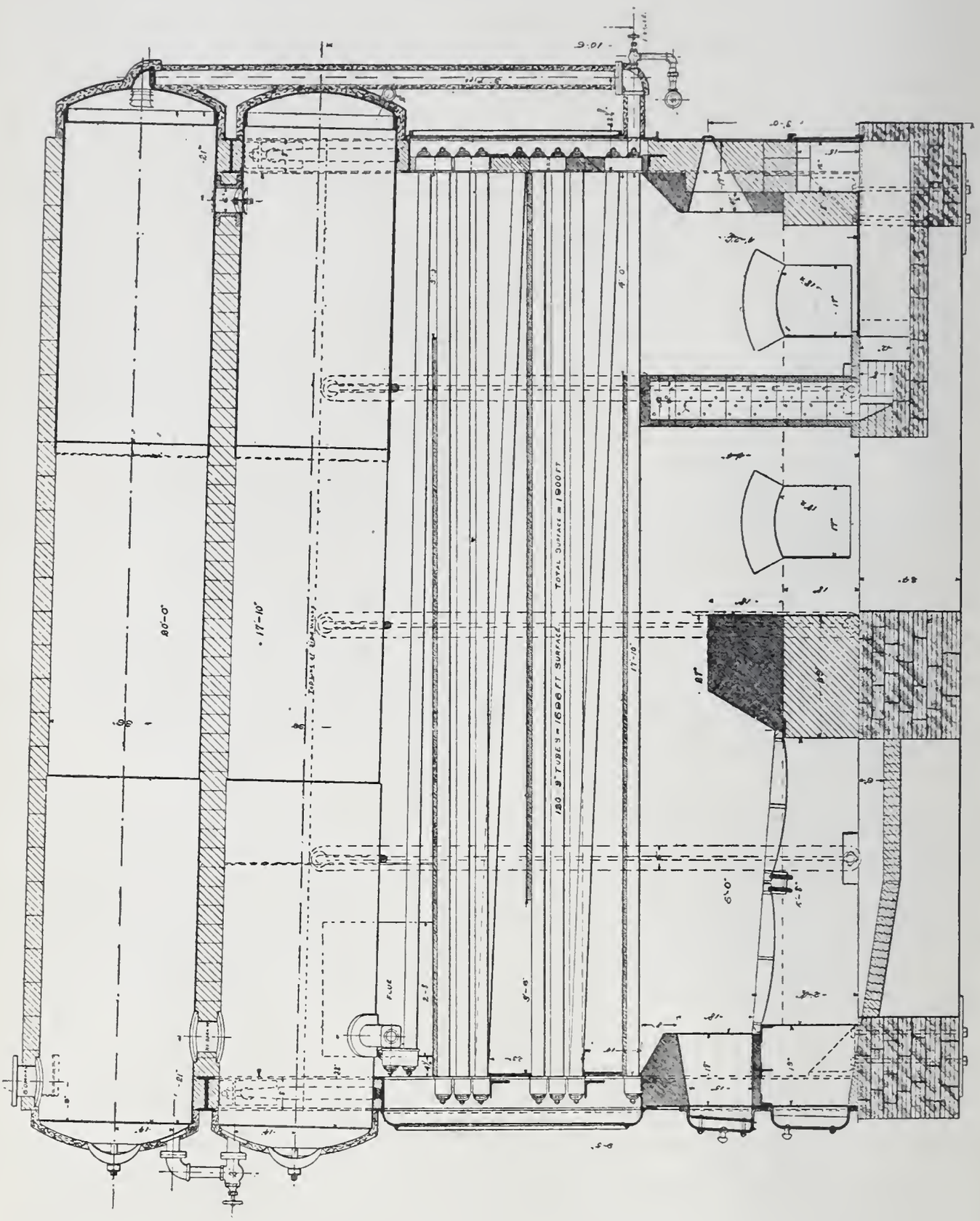

FIG. 5.—BOILER AT ROACH'S SHIPYARD—LONGITUDINAL SECTION.

suspended in steel framework and supports the upper one on flanged necks. The front neck is merely a saddle with no openings into the drums, and is fastened only to the lower drum to allow for expansion of the drums independently. The rear neck, which forms the drain passage, is of steel, with the opening into the water drum brass-bushed, and is controlled by a conical drop valve. The by-pass connecting the drums at the front end has an offset (not shown) to allow for expansion. The drums are slightly inclined downward toward the rear for drainage and to prevent the sediment from going into the tubes a second time. The sediment settles at the rear end of the water drum, whence it is blown out.

There are eight elements of 3-inch tubes, each having fourteen tubes 18 feet long and one tube 19 feet 6 inches long which connects with the upcast at the rear. The second and fifth rows of tubes are raised to provide access, but this has been found unnecessary. There are three rows of baffles, owing to the flue being at the front. The fire-brick air passages in the combustion chamber did not prove lasting, and were removed.

This boiler works at 100 pounds pressure and supplies four steam hammers, several engines, and also heats some of the shops. It has 1760 square feet of heating surface, 36 square feet of grate surface, and is rated at 175 horse-power. It has been run up to 265 horse-power.

Professor Spangler has made six tests of this boiler under normal working conditions. The equivalent water evaporated per pound of combustible from and at 212° F. was as follows: April 18th, 12.54 pounds; 19th, 11.65 pounds; 20th, 11.70 pounds; 21st, 11.81 pounds; 23d, 12.39 pounds; 24th, 11.05 pounds. The return tubular boiler alongside was tested and the result was 10.97 pounds under the same conditions.

The first annual inspection of the boiler took place on March 31st. The inspection was made by Mr. J. T. Fennell for the Maryland Casualty Company, and a personal inspection was made by Mr. J. M. Lukens, Chief of the Bureau of Boiler Inspection for Philadelphia, accompanied by an assistant. The upper tubes were found perfectly clean, and some thin scale, which appeared to be peeling off, was observed in the bottom row. Mr. Fennell states that the tubes are in the same condition as he found them in his last inspection on December 9, 1900. The scale appears to peel off as fast as it forms, and is carried up and deposited in the drums.

Previous to the erection of this boiler an experimental boiler was built for the purpose of determining the length of coils permissible. It consisted of three 10-inch by 3-foot drums, 160 1-inch by 3-foot tubes, and thirty-six $1\frac{1}{2}$-inch and $1\frac{3}{4}$-inch fire-box tubes 3 feet long. Two hundred pounds pressure was carried, and superheated steam of various degrees was produced. The length of the coils was varied from 30 feet to 240 feet, with tubes only $\frac{3}{4}$ inch inside diameter. The results were very instructive.

ON THE SCIENCE OF STEAM-MAKING.

JOHN C. PARKER.

Read April 6, 1901.

In a historical sketch of the steam-engine by Rankine (p. xix) occurs this passage: "In the history of mechanical art, two modes of progress may be distinguished,—the empirical and the scientific; not the practical and the theoretic, for that distinction is fallacious: all real progress in mechanical art, whether theoretical or not, must be practical. The true distinction is this: that the empirical mode of progress is purely and simply practical; the scientific mode of progress is at once practical and theoretic. . . . Up to the period when Smeaton perfected the atmospheric engine, the progress of the 'fire-engine,' as the steam-engine was then called, had been merely empirical; and in everything that depended on principle, the steam-engine of that period was a most rude, wasteful, and inefficient machine."

The wastefulness of the steam-engine was the prime cause of its scientific development, whereas the boiler presented no such economic problems. The comparatively high economic performance of the boiler under adverse conditions has retarded scientific development, and its progress has been entirely empirical.

To make the steam-engine operative certain well-defined principles must be followed. It is not so with the boiler; any kind of an apparatus, no matter how oddly it may be constructed, will produce steam nearly as efficiently as the most approved design. It has been so easy to make steam that there has been little incentive toward scientific treatment of the problem.

The physical conditions involved in the scientific generation of steam can be graphically shown by a diagram (Fig. 1).

The vertical scale represents temperatures above 0° F., 2500° F. is taken to indicate the initial temperature of combustion, and the curve illustrates the fall in temperature of the gases in their passage to the flue, where they escape at 600° F. The line at 362° F. represents the

boiler temperature due to the pressure (in this case 143 pounds) and the difference in temperature between the boiler and the flue gases is thus 238°.

Since, owing to rigidity of construction, present practice aims to secure equal temperature throughout the boiler, the line at 362° will be straight, and, since there can be no conduction of heat from a lower

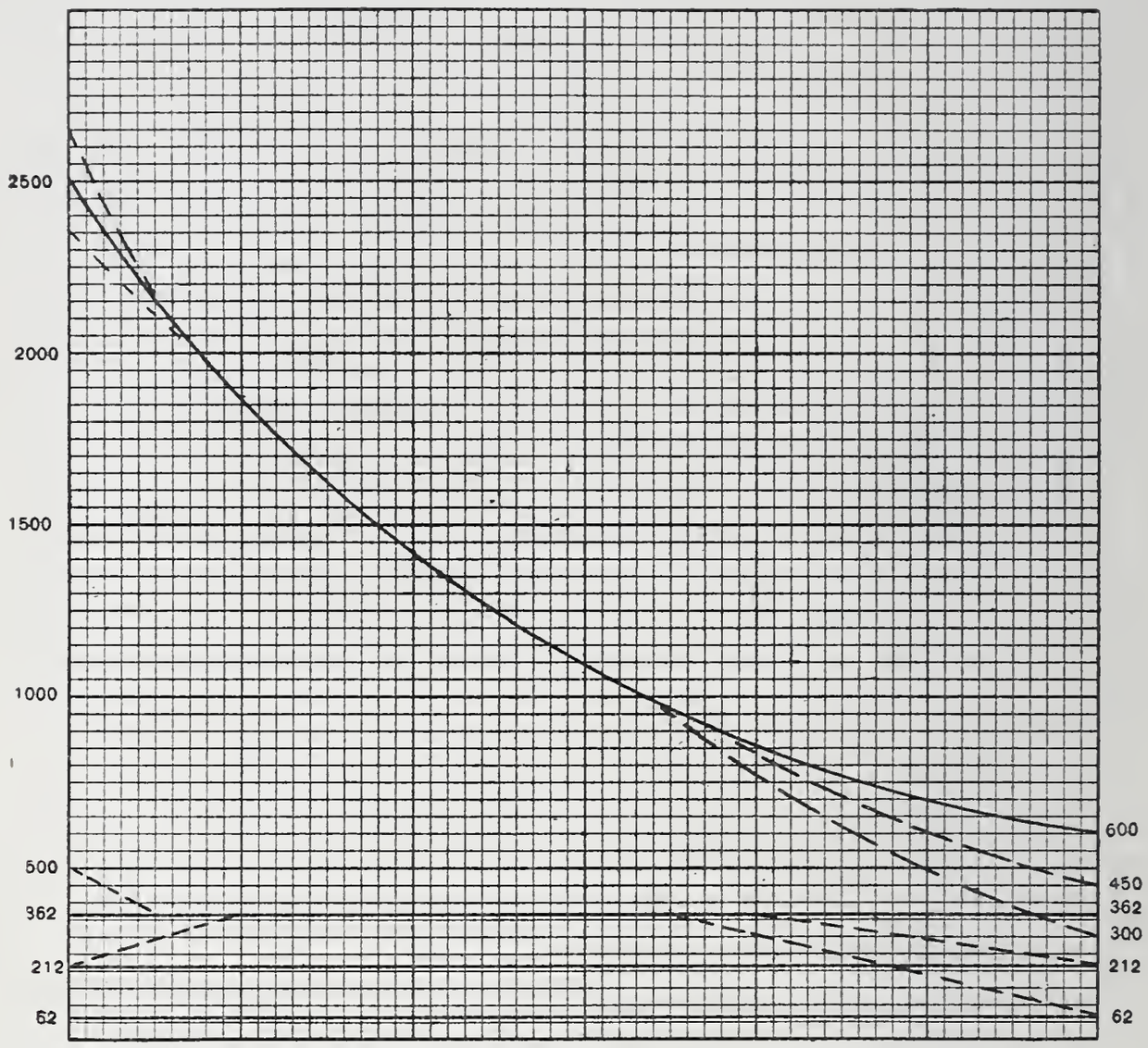

Fig. 1.—Heat Diagram.

to a higher temperature, it would be impossible to reduce the temperature of the gases below 362°.

But suppose we are not tied down to a rigid structure, and are free to have the different parts of the apparatus at different temperatures without affecting each other. We will cause the feed water to flow in the opposite direction to the gases. If the feed comes from a heater at 212° F., that end of the evaporation line will be inclined (slightly curved) from the starting-point at 212° F. until 362° is reached, when

it will be horizontal to the point at which superheating begins, where it will again be inclined, but very much more toward the vertical, both on account of the low specific heat of steam and the great difference in temperature.

With the same difference in temperature between the flue gases and the water as before (238°), the flue temperature would be reduced to 450°, which amounts to a saving of 12.4 per cent. If the feed water happened to be at 62°, the flue temperature would be reduced to 306° (with the same difference), which would mean a saving of 23.39 per cent. In this case the temperature of the gases is lower than the temperature of the steam, and this illustrates how heat may be transmitted from a lower to a higher temperature by convection.

It will be observed that superheat could not be added under these conditions at the cool end, but it might be very easily at the other end, with the result of increasing the initial temperature of combustion, and so adding to the economy at both ends.

If the water came in at the hot end of the diagram the rise in temperature would be more rapid, as indicated by the dotted line, but the initial temperature of combustion would be lowered as shown.

It must be evident that to secure the maximum transmission of heat from the gases to the water they must flow in opposite directions, and evaporation must be completed in a single circuit. If any water is recirculated after being raised to the boiling-point, it must necessarily reduce the economy by raising the feed temperature and so reducing its capacity for absorbing the heat of the gases; furthermore, superheating would be impossible and the initial temperature of combustion would be lowered.

It is also plain that, while the transmission of heat is as the square of the difference in temperature, the difference will not be maintained except in proportion to the rapidity of the flow which must be impelled by a constant force.

The diagram demonstrates that the functions of the economizer, the boiler, and the superheater are but separated parts of a single progressive operation which can be more perfectly accomplished in one apparatus.

This is in effect an application of the regenerative process first applied to the air engine about the year 1816 by the Rev. Dr. Stirling, and subsequently improved and modified by Mr. James Stirling, Captain Ericsson, Mr. Siemens, and others. Attempts were made to apply it to steam generating in France by Belleville in 1856, and in

America by Herreshoff about 1878. Mr. Yarrow has made an application of it to his type of boiler quite recently, and he presented an excellent paper on the subject before the British Institute of Naval Architects at the March meeting, 1898.

Belleville and Herreshoff both started on the basis that the flow of the water and gases should be opposite, and evaporation progressively secured in a coil. Both used a pump to maintain the flow, and to that fact their failure may be ascribed.

Belleville assumed that the trouble was due to there being no water in the tubes in direct contact with the flames, and so abandoned his correct principle. He resorted to the common practice of supplying the water to the hot end of the coil, but his troubles were not ended. He made no material progress until he discarded the pump and adopted a gravity circulation. It took him twenty-three years to develop an operative boiler, and that he did so finally, on an incorrect principle, is a remarkable tribute to his personality.

After twenty-two years of use and six years trial in the British navy, which has now about 1,000,000 horse-power, the Belleville boiler has just been condemned by a Parliamentary commission, composed of the most experienced engineers in all Great Britain.

We now have the spectacle of the best engineering talent in the British Empire making a series of exhaustive tests of the *most tried* boilers to take the place of the Belleville.

If we draw any significance from this, it means that twenty years, or any number of years use, will not make a good boiler of a bad one. It means that none of the boilers come up to the requirements, and that there is very little difference between them. It means that, so far as the boiler question is concerned, they are farther at sea than any of their ships, else why should they proceed to test boilers which have been in use a great many years, and the qualities of which are as well known as the Belleville? The fact is that after two centuries of empirical progress we find ourselves at the opening of the twentieth century with the steam generating problem still before us. The "boiler question" has been peculiarly acute during the past decade, particularly in Great Britain, and it would seem as if important results were to be expected, in view of the amount of attention which is being given to the subject.

So far as principle goes, we are making steam to-day by the same process adopted by Hero, of Alexandria, 2000 years ago,—*i. e.*, we boil water in large quantities and draw off the steam from the same chamber

—both very improper practices. We may have stuck some flues through the water chamber to increase the heating surface, or perhaps we have divided up the water space into a mess of tubes, but so far as principle goes, Hero was not one whit behind us in the art of steam-making.

While pressures were low the boiler was reasonably satisfactory; but when the pressure rose above the atmosphere, a new condition was introduced: the pressure was no longer constant and explosions began to be known. As weakness developed it was met at the visible point, and a stay was inserted, a tube beaded over, or a furnace corrugated. Safety became the fundamental idea in boiler design to the exclusion of correct principles, with the result that neither has been attained. The comparative safety of the boiler to-day is more of a tribute to the steel-maker than to the designer.

Only one important conclusion has been reached in the steam-making problem in a century of remarkable scientific progress in other directions. The idea has become almost universal that a free circulation of the water is essential to the safe generation of steam, and that idea is absolutely incorrect.

The primordial condition for the safe generation of steam is a *constant flow* of the water and steam in one direction. This condition has never been fulfilled. The constancy of the flow is affected in two ways: by forcing the fire until the water is driven in the wrong direction, and by the lifting effect due to falling pressures, which produces a like result.

While the lifting effect due to falling pressures has been well known, the extent of its influence on the motion of the water and steam has never been fully appreciated; in fact, most of the troubles connected with steam-making can be traced directly to this cause.

It is a well-seated belief among engineers that water must be in continual contact with the surfaces exposed to the radiant heat to prevent damage; but how water is to be in continual contact with a square foot of surface which is evaporating enough water to entirely cover it with a layer of steam from $\frac{1}{8}$ inch to $\frac{1}{4}$ inch thick once every second has not been explained. Water will not prevent overheating without motion, while steam is most efficient in carrying off the heat if in rapid and constant motion in one direction. Rankine states (p. 261) that the most rapid convection of heat is that which is effected by means of a cloudy vapor, which combines the mobility of a gas with the comparatively greater conducting power of a liquid.

The principal conditions involved in the evolution of a satisfactory steam generating apparatus may be stated as follows:

In a perfect steam generator—

1. The water and gases must flow in opposite directions to secure the maximum transmission of heat.

2. The flow must be constant and at maximum speed to obtain the highest efficiency of the surface and prevent overheating.

3. There must be no circulation of the water; evaporation must be secured in one circuit.

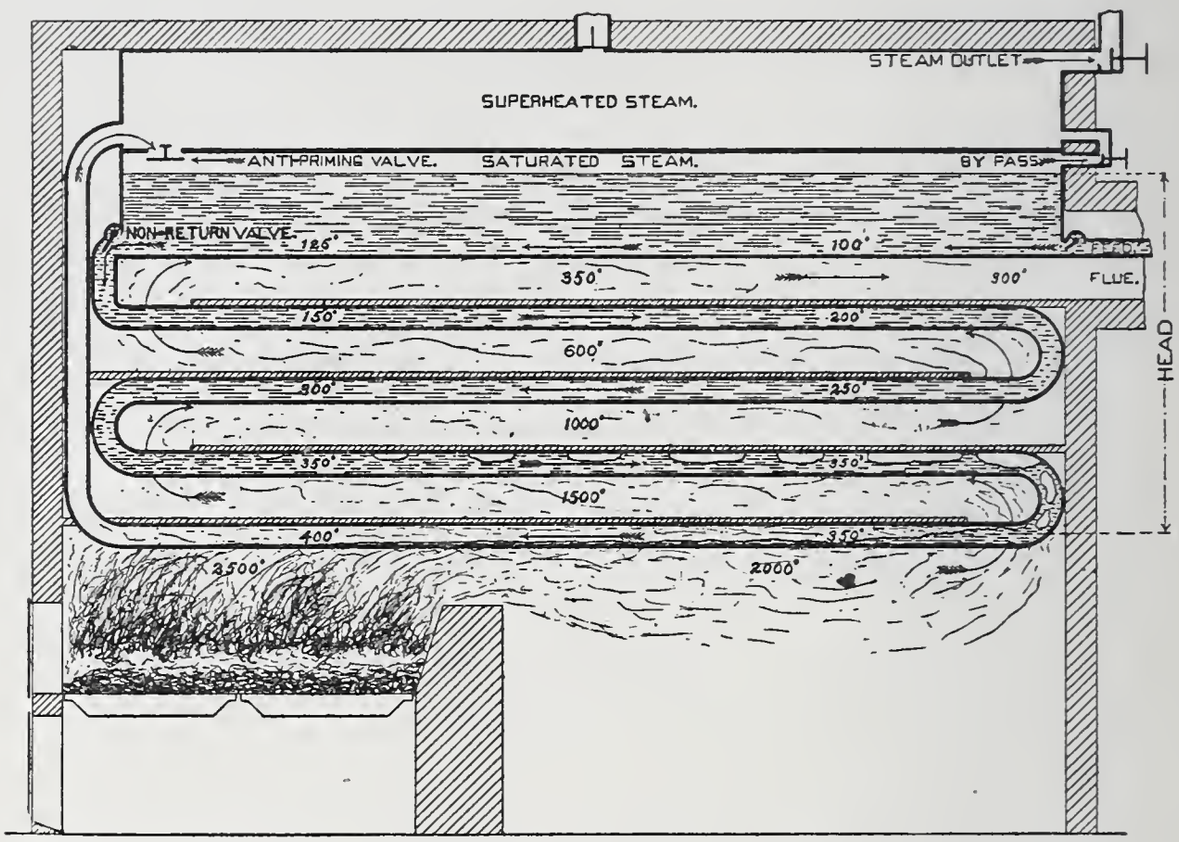

Fig. 2.—Evaporation Diagram.

4. The steam must flow directly from the hottest part of the furnace to the steam reservoir without passing through water.

5. The steam supply must be separated from the water so that priming, foaming, or lifting will be impossible.

6. There must be sufficient steam and water room to prevent excessive fluctuations in pressure and water level.

7. The internal surface must be kept clean automatically and the external surface must be perfectly accessible.

8. There must be no fluctuations in the temperature of the metal; feed water on hot surfaces must be made impossible.

9. There must be perfect flexibility to permit independent expansion of each part.

10. The apparatus must be simple, with fewest and best joints, and arranged to permit ready access to every part.

11. The apparatus must be absolutely reliable in operation under adverse conditions, with ordinary care.

12. The apparatus must be durable, without frequent repairs, and with freedom from leaks.

The essential elements of a steam-making apparatus designed to fulfill the foregoing conditions are shown in the evaporation diagram (Fig. 2).

There is a dry steam chamber, a water chamber beneath it, a tubular passage extending downward from the water chamber, the lower end of which is connected to the dry steam chamber by a direct upcast passage. An opening between the chambers, controlled by a non-return valve, completes the circuit, and equalizes the pressure throughout the apparatus. The valve prevents "lifting" due to falling pressures, and a by-pass from the steam space of the water chamber to the dry steam chamber prevents excessive difference in pressure during such periods. A non-return valve at the induction end of the tubular passage prevents reversal of the flow.

In operation the water is fed into the lower chamber, whence it flows into the tubular passage and seeks its level in the upcast. When heat is applied, the water is soon driven out of the upcast by the expansion of steam. The result is a column of water against a column of steam, with a constant effort on the part of the water to regain its level in the upcast, which is frustrated by continuous evaporation.

It is a common idea that the "buoyancy" of the steam will prevent the downflow in the passage by its tendency to rise and carry the water with it. We know that gravity affects all matter, and that, theoretically, a pound of steam would fall as fast as a pound of water. That a bubble of steam rises to the top of a column of water is only true when the column is supported. The steam and the water can not occupy the same space, and the water, being the heavier, displaces the steam and forces it to the top. A column may be part water and part steam, yet the column, considered as a whole, must obey the law of gravity and will fall unless supported. The laws of hydraulics are as true in a boiler under constant pressure as in a penstock.

The progressive increase in the temperature of the water and the corresponding decrease in the temperature of the gases are indicated by the approximate figures. The bubbles indicate the progress of evaporation, which is completed in the lower tube, and the steam

reaches the upcast in a superheated state. With an ordinary boiler the temperature in the upper tube would be higher than the temperature of the gases in this case.

To secure the maximum gravity head of water would require—

a. A vertical downcast with only water in it.

b. A vertical upcast with only steam in it.

c. Complete evaporation secured in a horizontal tube connecting the lower ends of the two columns.

In the diagram the downcast is cut up into bends to give the required length of flow. The effective head will be the vertical distance from the point in the tubes where the solid column of water becomes broken by evaporation to the water level in the drum.

The rate of flow can be changed in three ways:

1. By varying the proportions of the passage and the number of bends.

2. By varying the head of water.

3. By varying the rate of combustion.

The question, then, of keeping the hot end of the tubular passage from getting too hot is merely a question of correct design, since whatever temperature a tube will withstand is no worse for it directly over the fire than near the flue.

The lifting effect upon the water, occasioned by falling pressures, affects the gravity force and acts as an instant check on the circulation or flow in any boiler. This effect is neutralized and the flow in the tubes is maintained during periods of falling pressures by the combined action of the anti-priming valve and by-pass. The valve closes at the beginning of a drop, and the by-pass allows sufficient upflow of steam to prevent excessive difference in pressure between the two chambers. The result is that the flow in the tubes is constant irrespective of changes in pressure. The tubes may be automatically flushed by closing the by-pass and causing a drop in pressure in the steam chamber.

The following points may be noted:

The water and gases flow in opposite directions, which is the ideal condition.

The flow is positive, and is most rapid in the bottom tube owing to the expansion of the water into steam.

The flow is independent of any inclination of the tubes, and is as rapid in a horizontal as in a vertical tube.

The upper tubes are always full of solid water, and there can be no water-hammer action.

Evaporation is accomplished without recirculation of the water.

The steam has a short dry passage to the steam chamber, and there is no ebullition or "boiling" action.

The separate chambers for the steam and the water eliminate the possibility of priming or foaming.

The water chamber is a perfect settling tank, owing to the entire absence of ebullition.

The pressure and the water within the apparatus can be utilized for flushing the tubes automatically.

The temperature of the heating surface is practically non-fluctuating.

It is a remarkable fact that, while it has been so often recognized that the water should flow from the flue toward the fire, it has been almost universally assumed to be impracticable, without trial. Rankine states it, and so do Professor Thurston and others.

The practice with "coil" boilers, of which the Belleville is the chief exponent, is to supply the water at the hot end. When the economizers were added to the Belleville by the British Admiralty, the question was discussed of having the flow in the proper direction, but it was decided that it was too dangerous, and the flow was upward as in the boiler.

In conclusion it may be stated that it has been demonstrated by experiment that the same coil will withstand more heat with the water supplied at the cold end than at the hot end, and the reason is not far to seek. In the first case the larger portion of the coil is filled with water and the steam has a free means of escape, whereas in the second case there can be very little water in the coil, and what there is tends to clog the escape of the steam which is mostly generated in the lower tubes and is thus compelled to traverse the entire length of the coil.

THE DESIGN AND CONSTRUCTION OF FACTORY CHIMNEYS.

FRANCIS SCHUMANN.

Read April 20, 1901.

From an engineering standpoint a chimney or chimney stalk is a vertical flue or tube of greater or less height, for removing the products of combustion, of smoke from furnaces, for inducing combustion, or for the removal of deleterious gases.

The flow of the heated air and gases is due to their rarefied condition as they pass through the flue, thus constituting a column of air of less specific gravity than that of the ambient atmosphere.

Chimneys are built of either brick, iron, or steel. Only those of brick will be considered in this paper, and they should be constructed to fulfill the following essential conditions:

1. The flue must be of proper height and sectional area necessary for a given velocity and volume of air for efficient combustion of the fuel burned in the furnaces.

2. Proportion and form of flue should be such as will offer the least amount of resistance to the flow of the gases.

3. Maintenance of the temperature of rarefaction by non-conduction through the walls or sides of the flue.

4. Provision for the expansion and contraction of the material composing the chimney.

5. Stability of the structure or power to safely withstand the external forces, being the combined force of wind and weight of structure.

Form and Dimensions of Flue.

The cross-sectional form of the flue is usually circular, octagonal, or square, the relative efficiency being 100, 97, and 90, in the order named; the area should maintain throughout the height of the flue without reductions or enlargements.

The dimensions are dependent upon the kind and amount of fuel burned, the form and length of the ducts leading to the base of the chimney from steam boiler or other furnaces, and in some cases it becomes necessary to adjust the height to suit local conditions, such as

adjacent high ground or buildings, or for the purpose of emitting deleterious gases at higher altitudes.

Peclet was the first to exhaustively investigate and publish a theory concerning chimney draft. Subsequently Rankine's treatment of the subject in a more amplified form became known, and his method and formulæ are those generally accepted.

The application of these theoretical formulæ to practice is, however, associated with the difficulty that they require exact data regarding the elements of friction and temperature, values which greatly vary with the form of furnace, grate, boiler, ramifications of ducts and flues, and other passages for air or gases, as also the kind of fuel and method of firing. These difficulties, beside the rather complicated nature of the purely theoretical, have induced engineers to create empirical formulæ which give values agreeing with those of chimneys in actual satisfactory operation.

An engineer designing a chimney must and does have full knowledge of one essential; this is the power to be developed, and, consequently, the amount of fuel to be burned. With these data and statistics regarding the behavior of chimneys in actual operation he is enabled to construct simple and reliable empirical formulæ for his guidance. In the preparation or use of such formulæ care must be observed to make due allowance for any conditions of moment varying from those upon which the formulæ are based.

It has been found that the far greater number of chimneys are subject to average conditions, and hence favorable to the use of empirical formulæ. Some of the exceptions to these average conditions are when furnaces are distant from the base of the chimney, when they are elevated and ducts lead downward to the base, when the ducts are restricted in area, or pass through damp or wet media, or when the chimney is surrounded by high buildings or near cliffs.

The following formulæ are presented by the writer as new and giving values agreeing very closely with those confirmed by actual and satisfactory results. The only claim that can be made in their favor over other existing similar formulæ is their greater simplicity.

Flue Proportions.

Reference.

K = total amount of coal burned per hour in pounds.

H = height of chimney in feet.

A = sectional area of flue in square feet.

The proper sectional area for a given amount of coal burned per hour should be:

$$A = \frac{650\,K}{36000\sqrt[4]{\frac{650\,K}{36000}}};$$

in which 650 is the smoke produced, in cubic feet per hour per pound of coal, and 36000 a velocity in feet per hour, or 10 feet per second, the velocity increasing with the amount of fuel burned per hour.

The area thus found may be altered to suit different heights of chimneys, but should not exceed 10 per cent. either way when used in the following formula for obtaining the height:

$$H = \frac{250\,K}{500\,A - K};\quad K = \frac{500\,A\,H}{H + 250};\quad A = \frac{H\,K + 250\,K}{500\,H}.$$

The proportions resulting from these formulæ apply to circular flues, and are ample for any kind of coal, whether anthracite, coarse or fine, or bituminous.

When the flue is octagonal or square, the height H, as found above for given values of A and K, is to be increased $\frac{100}{97}$ and $\frac{100}{90}$ respectively.

The best economy in the furnaces is attained when the temperature of the gases at the base of the flue is between 550° and 600° F.

The amount of coal consumed per horse-power per hour is between 2.5 and 5 pounds, and burned at the rate of from 10 to 30 pounds per square foot of grate surface.

Construction.

The outer form of brick chimneys is either circular, octagonal, or square in plan, and pyramidal in elevation, the sides having a regular taper of about $\frac{3}{8}$ inch per foot; the diameter at the base, the inscribed circle of octagon or square, being between one-tenth and one-eighth of the height, the proportion being dependent upon the required stability and ratio of flue area to height.

The shell which encloses the non-conducting inner lining should be of good hard-burned brick, of uniform size, laid in cement mortar. To insure circular bondage stretchers should preponderate, say four courses of stretchers to one of headers. It is good practice to bind the shell by iron bands or hoops made of, say, $\frac{1}{4}$ inch by 4 inch bars, securely riveted at joints. These should be built in with the brick-work about 8 feet apart throughout the height of the chimney. The bands are made in sizes to allow the laying of one course of stretchers

between the band and the outer surface of the shell, the space between band and inner course of bricks being well filled and packed with mortar. The bands should be so placed as to come immediately above or below a header course.

Care must be exercised to secure thorough packing of the joints in the brickwork with mortar, so that the chimney walls be as impermeable as possible to the inflow of external air which would tend to lower the temperature in the flue.

The inner or flue lining should extend the full height of the chimney, and in no case bond with the outer shell, except at the duct inlets at the base. An annular space of not less than one inch should separate the lining from the outer shell. The lining, which is usually one-half brick thick at the top, increasing by half bricks in sections, is held in position vertically by projecting corbels of outer shell just touching the outer surface of the lining, thus permitting the free movement due to expansion.

The lower third of the lining should be faced with fire brick, laid in fire clay, to resist the higher temperature of the gases; the upper portion may be of ordinary brick. It is important to avoid sharp corners where the ducts enter the flue; the larger the curve, the better.

The top of a chimney should be covered by a cast-iron cap, serving as a binder, or tie, for the upper courses of the brickwork, also as a cover, or protector, of the shell, space, and lining, from the weather, and as a deflector of the wind by inclining the upper surface at an angle of about 30° down and outward. The cap should be so arranged that it rests upon and is secured to the outer shell only. The upper surface of the cap projects over the inside of the inner lining, from which point a flange or apron extends down several inches below the top of lining, care being taken to leave a clear space of, say not less than 6 inches between the top of lining and under side of cap to permit unobstructed longitudinal movement from expansion.

Protection from lightning is very essential in tall chimneys; a good method is the use of a heavy copper band placed several inches below the bottom of the cast-iron cap, where it is secured to the brickwork by copper bolts to prevent its sliding downward. To this band, copper rods, pointed and gilded, are soldered and riveted; the rods are placed at intervals not exceeding 2 feet, and of a length to bring the points about 2 feet above the highest part of the cast-iron cap, the rods being bent outward so as not to touch the edge of the cap. Conductors made of about $\frac{1}{8}$ inch by 1 inch copper strips lead from the

band to a copper plate about 3 feet square by $\frac{1}{16}$ inch thick buried in the ground near the base of the chimney, at least as deep as the bottom of the foundation, and where dampness exists, or, better still, in any adjacent deep well or body of water. All joints should be riveted and soldered, and expansion provided for by slightly corrugating the conductor at intervals, being careful to avoid sudden bends. No insulation should be used.

Stability.

The stability of a brick chimney depends upon the strength of the material of which it is constructed to safely resist the stresses from the external forces, being the lateral force of wind and the superimposed mass, acting as a resultant at any horizontal plane throughout the height, or at the base of the structure.

The proportions must be such that the axis of rotation, or neutral axis of the resultant force, never falls within the respective cross-section, thus insuring compressive stresses of uniformly varying intensity only, tensile stresses not being permissible in masonry structures.

The non-conducting inner lining of the flue, being separate from the outer shell, does not add its mass toward the stability of the chimney, but only to that of the foundation upon which it rests.

The force of wind which a chimney should safely resist ought not to be taken at less than 50 pounds per square foot on a plane surface; its direction can be assumed to act horizontally without sensible error. The assumed force of 50 pounds is by no means excessive when considering the height and flexible nature of a tall chimney with a tendency to accelerate and gain in momentum, in direction with the wind storm, especially when it acts in gusts of great force and in unison with the vibration of the structure.

Procedure in Design.

After having decided upon the dimensions of the flue, find the outside dimensions at the top by adding to the flue diameter the thickness of the lining, the space between lining and shell, and the thickness of the outer shell, at the top; the lining thickness need not exceed one-half brick, or 4 inches; the space, say 1 inch, and the shell, one brick, or $8\frac{1}{4}$ inches.

From these outer dimensions lay out the side lines of the shell with a batter of say $\frac{3}{8}$ inch per foot down to the base of the chimney; sub-

divide the height into zones corresponding with the various thicknesses of the shell, resulting from the addition of brick dimensions, being respectively 4″, 8¼″, 12½″, 15″, 21″, 25″, and so on, each zone being of equal thickness throughout its height.

Determine the stability of each joint, commencing at the top; if deficient, add to the mass by increasing the thickness of the walls, or by increasing the outside diameter.

Pressure of Wind.

The maximum force of the wind which the structure should withstand with safety is:

For square chimneys, 50 pounds per square foot of elevation.

For octagonal and round chimneys, 25 pounds per square foot of diametrical plane.

Weight of Masonry per Cubic Foot.

Hard-burned brick in cement mortar, ...	115 to 120 lbs.
Fire brick in fire clay mortar, ...	137 lbs.
Concrete, average, ...	125 lbs.

The following table gives the results of tests made at the Watertown Arsenal in August, 1882, upon varieties of Philadelphia machine-made hard brick, and brickwork made of the same kind of brick, built into cubes 1½ bricks square and 5 courses thick:

	In Pounds per Square Inch. *First Indication of Fracture.*	*Ultimate Resistance.*
Single brick, ...	3012 to 5000	5540 to 11,720
Single brick, average, ...	4053	8114
Brickwork 1½ Bricks Square, 5 Courses High.—		
In lime mortar, ...	499 to 1070	799 to 1914
In lime mortar, average, ...	726	1375
In cement mortar, ...	627 to 2070	1654 to 2685
In cement mortar, average, . . .	1371	2141
	In Tons per Square Foot.	
Single brick, ...	217 to 360	399 to 844
Single brick, average, ...	292	584
Brickwork.—		
In lime mortar, ...	36 to 77	57 to 138
In lime mortar, average, ...	52	99
In cement mortar, ...	45 to 149	119 to 193
In cement mortar, average, . . .	99	154

For hard brick laid in cement mortar, 14 tons per square foot can be

considered a safe load, this being slightly less than one-sixth of the average load which caused first indications of failure, and less than one-eighth that of the lowest record for ultimate resistance.

Foundation.

The safe loads which the earth underlying the foundations can sustain vary between 1 and 12½ tons per square foot, the amount depending upon the character of the soil.

The weakest and most unreliable soil is blue clay, and the strongest is a hard, dry, red clay mixed with coarse sand and gravel, requiring the pick to loosen, such as prevails here in Philadelphia, which, to the writer's knowledge, is sustaining loads exceeding 12 tons without causing any appreciable settlement.

Such extraordinary bearing qualities as the last mentioned are unusual, and the general practice is not to exceed

5 tons on hard sand and gravel,
4 tons on fine sand, loam, and gravel,
3 tons on coarse sand mixed with clay,
1 to 2 tons on blue clay mixed with sand and a little loam, the sustaining power varying with the amount of moisture.

Earth of a plastic nature requires piling, or special treatment, varying with the conditions.

When the periodical rise and fall of adjacent bodies of water penetrate to the foundation, those earths which are composed of clay or admixture of clay and sand, and especially blue clay, become extremely doubtful and unreliable, and point to the necessity of piling.

Formulæ for Stability—General Principles.

I. When a structure such as a chimney is under a compressive vertical force (mass) only, the neutral axis or axis of rotation of a sectional plane or joint, will be at infinite distance from the center of gravity of the plane; the resultant force will pass through the center of gravity of the plane, which will be subject to compressive stresses of uniform intensity throughout.

II. When the structure is subject to a lateral force (wind) in addition to the vertical force, the resultant will intersect the sectional plane at a point beyond the center of gravity of the cross-section with the direction of the lateral force. The neutral axis or axis of rotation will approach the center of gravity of the cross-section from the side of the lateral force.

III. The position of the axis of rotation in a plane is independent of the amount of the external forces, but dependent solely upon the location of the resultant of the external force (mass and wind).

IV. When the axis of rotation passes through the cross-section, one side of the section, the windward, will be in tension, and the other, the lee, in compression.

V. When the axis of rotation passes by the section, the stresses are wholly compressive and uniformly varying in intensity, as should be the case in masonry structures in which tensile stresses are not permissible.

VI. The resultant external force in masonry structures should never fall outside of the core of resistance of the cross-section.

The quotient of any moment of inertia of a cross-section, in relation to the neutral axis passing through its center of gravity, divided by the distance of the edge of the section from the neutral axis, times the area of the section, is the distance from the neutral axis to a point in the bounds of the core of resistance.

In a circular or circle ring plane the core of resistance is bounded by a circle. In a square or hollow square it is a square with its diagonal perpendicular to a side of the plane.

VII. When the resultant of the external forces falls outside the core of resistance, the axis of rotation will pass through the cross-section.

VIII. When it falls within the core, the axis of rotation will pass by the cross-section.

IX. When it intersects the edge of the core, the axis of rotation will be at the edge of the cross-section, resulting in null stress at the axis of rotation, or the edge through which it passes, and double the normal stress at the farthest edge.

Formulæ for Stability.

Let Fig. 1 represent a symmetrical pyramidal prism of a given mass or weight subjected to a lateral force W, $j\ j$ being a joint or sectional plane.

Let m = mass or weight of prism above joint $j\ j$,
A = area of its diametrical plane or projection, and
b and b_1 = width at base and top, respectively;
G = center of gravity,
W = total lateral force acting at G, and
h = distance from joint to G, or lever arm for W.

x = distance from center of gravity of cross-section to intersection of resultant R (of mass and wind).

w = pressure of wind per square foot, 50 pounds for plane surface and 25 pounds for cylindrical or octagonal.

w_1 = pressure per square foot a given cross-section will resist when the axis of rotation is at the edge of the section.

$$W = w\,A;\quad h = \frac{b + 2\,b_1}{b + b_1}\,\frac{H}{3};\quad x = \frac{W\,h}{m};\quad w = \frac{X\,m}{A\,h};\quad w_1 = \frac{k\,m}{A\,h}.$$

m and x being known, the next step is the determination of the resulting stresses, and their character, acting at the joint.

Fig. 2 shows a joint $j\ j$ and its sectional plan, a solid square being chosen, with its core of resistance cross-lined. Three diagrams are also shown giving graphically the stresses throughout the cross-section for different positions of the axis of rotation.

Let a = area of section, and

g = center of gravity,

I = moment of inertia;

r^2 = radius of gyration square,

k = distance from g to core of resistance,

n–n = neutral axis of cross-section through g,

O = axis of rotation,

s = distance from $n\ n$ to edge of section, lee side,

s_1 = distance from $n\ n$ to edge of section, windward side,

y = distance from $n\ n$ to axis of rotation O,

d = distance from axis of rotation to any point where stress is sought,

d_1 and d_2 = distance from axis of rotation to respective edges, e_1 and e_2,

p = stress per unit of area at any point distance d from O,

p_1 and p_2 = maximum and minimum stresses respectively at edge e_1 and e_2.

(I) When $x < k$, axis of rotation falls outside of section; p_1 and p_2 compressive stresses.

(II) When $x = k$, $y = s_2$, d_2 and p_2 become null, and $p_1 = \frac{2\,m}{a}$.

(III) When $x < k$, axis of rotation falls within the section; p_1 compressive and p_2 tensile stress.

$$r^2 = \frac{I}{a};\ k = \frac{I}{s\,a};\ y = \frac{r^2}{x};\ p = \frac{m\,x}{I};\ d = \frac{m\,d}{a\,y};\ p_1 = \frac{m}{a} + \frac{W\,h}{I}s_1;\ p_2 = \frac{m}{a} - \frac{W\,h}{I}s_2.$$

When $\frac{m}{a} < \frac{W\,h}{I}s_2$, the stress is opposite in kind or tensile.

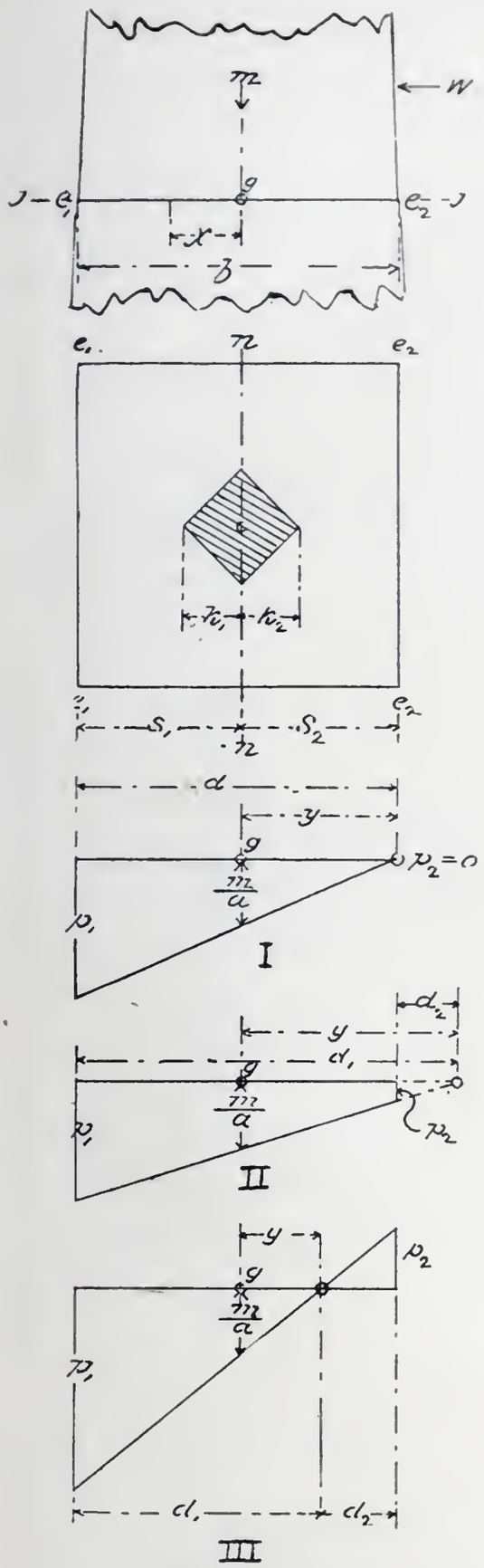

FIG. 2.

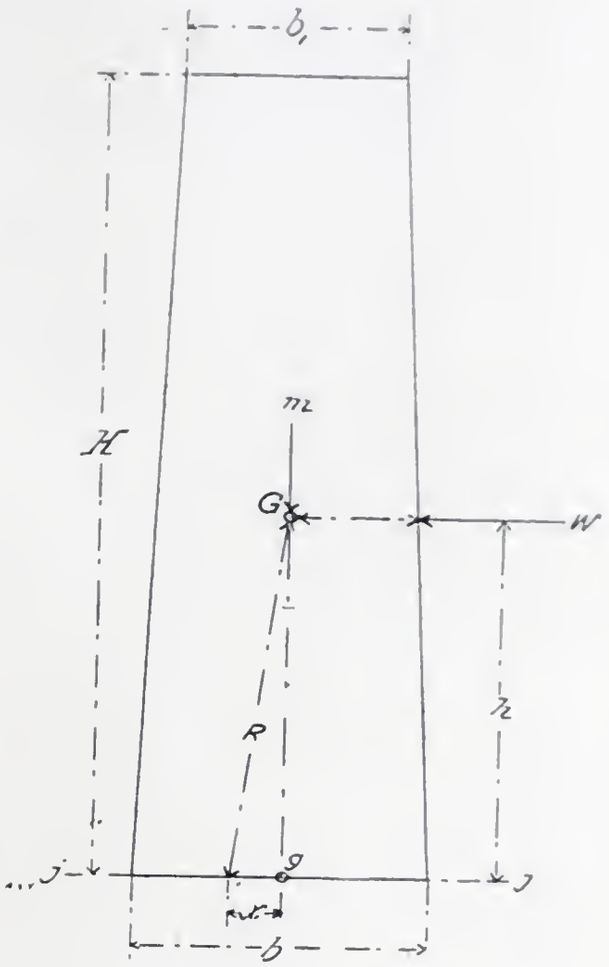

FIG. 1.

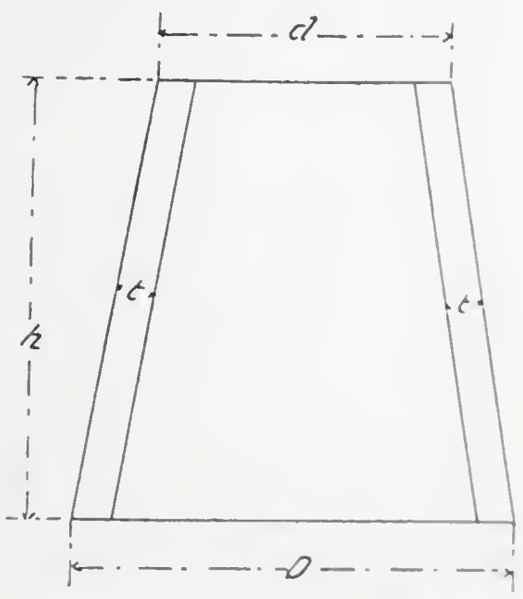

FIG. 3.

Volume of Solid and Hollow Frustums.

D and d = diameter of base and top, respectively, also inscribed circle of square and octagon.

h = height.

t = thickness, uniform throughout,

V = volume.

Frustum.

Solid conic, ... $V = 0.7854 \left[\frac{h}{3}(D-d)^2 + D\,d\,h\right] = \frac{\pi h}{3}\left(\frac{D^2 + D\,d + d^2}{4}\right)$;

Hollow conic, ... $V = \left(\frac{D+d}{2} - t\right)\pi\,h\,t$;

Solid square pyramidal, ... $V = \frac{h}{3}(D-d)^2 + D\,d\,h$;

Hollow square pyramidal, ... $V = h\left(\frac{4(D+d)}{2} - 4\,t\right)$;

Solid octagonal pyramidal, . . . $V = 0.8284\left(\frac{h}{3}(D-d)^2 + D\,d\,h\right)$;

Hollow octagonal pyramidal, . $V = 0.8284\left[h\left(\frac{4D+d}{2} - 4\,t\right)\right]$.

Formulæ Relating to the Cross-section.

Form of Section.	Area a.	Moment of Inertia I.	Core Distance $k = \frac{I}{sa}$.
Solid square, . . .	D^2	$\frac{D^4}{12}$	$\frac{D}{6}$
Hollow square, . .	$D^2 - d^2$	$\frac{D^4 - d^4}{12}$	$\frac{1}{6}\frac{D^2 + d^2}{D}$
Solid octagon, . .	$0.8284\ D^2$	$0.0547\ D^4$	$0.132\ D$
Hollow octagon, .	$0.8284\ (D^2 - d^2)$	$0.0547\ (D^4 - d^4)$	$0.132\ \frac{D^2 + d^2}{D}$
Circle plane, . . .	$0.7854\ D^2$	$\frac{\pi}{64}D^4 = 0.0491\ D^4$	$\frac{D}{8}$
Circle ring, . . .	$0.7854\ (D^2 - d^2)$	$\frac{\pi}{64}(D^4 - d^4)$	$\frac{1}{8}\frac{D^2 + d^2}{D}$

The neutral axis passes through the center of gravity of the section parallel to sides of square and octagon. D and d are the outer and inner diameters, respectively, of circle rings, inscribed circles of octagon, or length of side of square.

Example of a Chimney.

In conclusion, an example (Plate I) is given of a round chimney with circular flue, 4 feet in diameter, and 100 feet high, in which no tensile stresses shall exist when the wind exerts a pressure of 50 pounds per square foot on a plane surface. The earth underlying the concrete foundation shall not be subjected to more than 2 tons per square foot as a maximum pressure.

PLATE I. SCHUMANN.—FACTORY CHIMNEYS.—*Proceedings of The Engineers' Club of Philadelphia*, Vol. xviii, No. 3 (July, 1901).

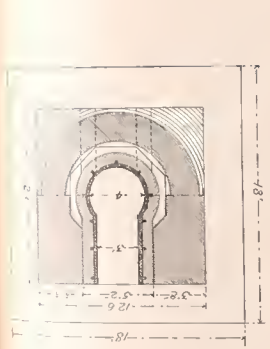

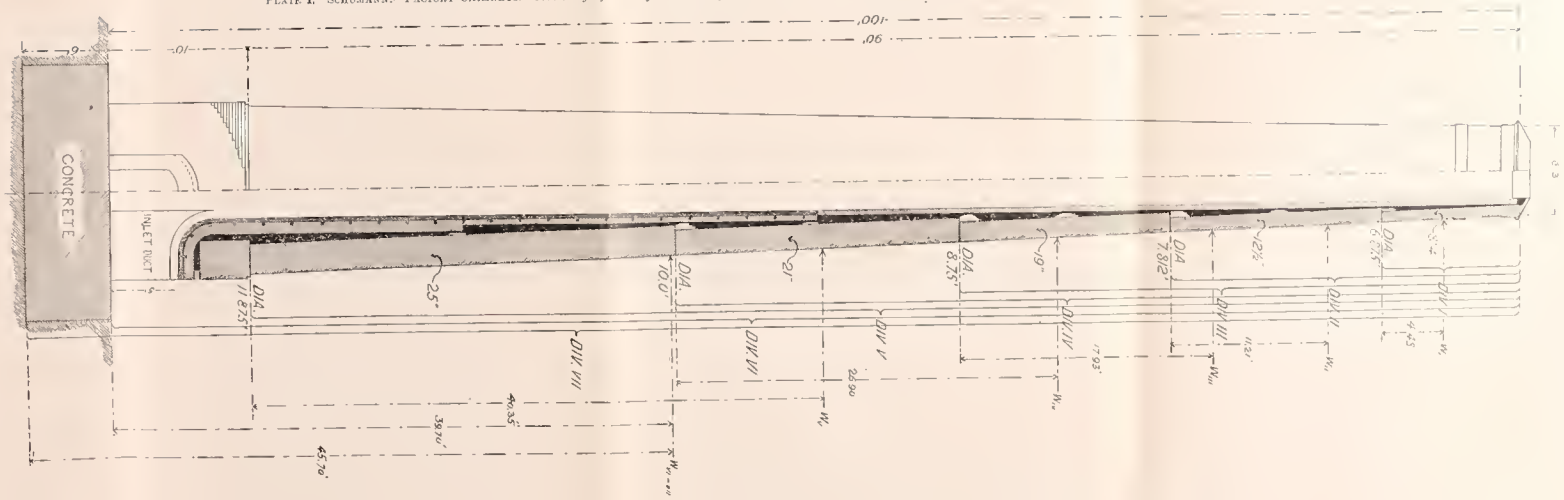

square foot on a plane surface. The [illegible] foundation shall not be subjected to more than 2 tons per square foot as a maximum pressure.

TABLE I.—SUMMARY OF RESULTS. EXAMPLE OF CHIMNEY 100 FEET HIGH, WITH FLUE 4 FEET IN DIAMETER.

Division and Joint.	Diameter at Joint in Feet.	Mass or Weight in Tons.	Area of Section in Square Feet.	Area of Diametrical Plane in Square Feet.	Total Wind Pressure in Tons.	Height of Center of Gravity of Diametrical Plane above Joint in Feet.	Moment of Inertia.	Radius of Gyration Squared.	Distance Between Center of Gravity of Section and Point of Intersection of Resultant in Feet.	Core Distance from Center of Gravity of Section in Feet.	Distance Between Center of Gravity and Axis of Rotation in Feet.	Maximum Stress in Tons per Square Foot.	Minimum Stress in Tons per Square Foot.	Form of Plan at Joint.
	D	m	a	A	W	h	I	r^2	x	k	y	p_1	p_2	
I, . .	6.875	11.28	13.36	65.6	0.82	4.48	64.62	4.84	0.32	1.41	15.10	1.04	0.64	Circle ring.
II, . .	7.812	29.08	22.11	175.7	2.19	11.21	129.80	5.87	0.84	1.53	7.00	2.04	0.58	" "
III, . .	8.750	55.48	32.70	300.0	3.75	17.93	227.40	6.95	1.21	1.59	5.74	2.96	0.40	" "
IV, . .	10.000	103.68	45.36	487.5	6.09	26.90	402.50	8.87	1.58	1.78	5.61	4.31	0.25	" "
V, . .	11 875	203.48	64.10	815.6	10.19	40.35	800.00	12.48	2.02	2.10	6.17	6.20	0.45	" "
VI, . .	12.500	256.48	83.00	940.6	13.30	39.70	1187.10	14.30	2.05	2.28	7.00	5.87	0.33	Generally square.
Shell, .		256.48												
Lining, .		62.20												
Concrete,		121.50				6.00								
VII, . .	18′×18′	440.18	324.00	940.6	13.30	45.70	9248.00	28.54	1.36	3.00	20.98	1.943	0.775	Square.

It will be noted that the axis of rotation falls outside the section in every case, hence compressive stresses only. Joint V is that of least stability; were the axis of rotation just touching the edge of section, resulting in null pressure at this point, the stability would still be such that it would sustain a wind pressure per square foot on a plane surface of

$$w_1 = \frac{k\,m}{A\,h}\,2 \times 2000 = \frac{2.1 \times 203.48}{815.6 \times 40.35}\,4000 = 51.94 \text{ pounds.}$$

The weight of section I includes the weight of the cast-iron cap of 4 tons.

To fulfill these requirements it was necessary to proportion the base with a diameter equal to one-eighth the height, or 12 feet 6 inches, resting on a concrete foundation 18 feet square by 6 feet thick. The top of the chimney has a diameter of 6 feet 3 inches, making the batter $\frac{3}{8}$ inch per foot of height.

The arch of the inlet duct is of the same radius as the flue—2 feet—being in fact a continuation of the flue curve in the form of a bend until it forms the roof of the inlet duct as an arch.

Attention is called to the square base, or plinth; this form became necessary to obtain stability at the point where the inlet ducts greatly reduce the effective sectional area, where the shell continued down to top of concrete as a conic frustum.

The chimney was proportioned for a capacity of 360 horse-power, allowing 5 pounds of coal per horse-power, which makes a total of 1800 pounds per hour. With this as a basis, the area of flue was

$$A = \frac{650\,K}{36000\sqrt[4]{\frac{650\,K}{36000}}} = \frac{1170000}{36000 \times 2.38} = 13.65 \text{ or a diameter} = \sqrt{\frac{13.65}{0.7854}} = 4.17,$$

for which four feet was adopted, or 12.56 square feet area.

The height became:

$$H = \frac{250\,K}{500\,A - K} = \frac{250 \times 1800}{500 \times 12.56 - 1800} = \frac{450000}{4580} = 102.8$$

for which 100 feet was adopted. The slight reduction in dimensions, made for the sake of rounding off, has no appreciable effect in view of the liberal allowance of 5 pounds per horse-power.

The height h for division VI, of 39.7 feet, is the distance from the base, or joint of the division, to the common center of gravity of the wind force of the round and square portions of the chimney, the pressure per square foot being respectively 25 and 50 pounds of projected area.

The total pressure against the round part is 10.19 tons, with a lever arm of $40.35 + 10 = 50.35$ feet.

That of the square part is $= \frac{12.5 \times 10 \times 50}{2000} = 3.125$ tons, with a level arm of 5 feet, hence, $39.7 = \frac{10.19 \times 50.35 + 3.125 \times 5}{10.19 + 3.125}$.

Table I gives summary of results for the chimney under consideration.

The permissibility of tensile stresses in masonry structures is sometimes advocated,—in fact the building laws of certain European States

permit as high as 2½ tons per square foot in brick chimneys built with cement mortar. All experience and sound reasoning, however, is to the contrary. Brickwork lacks all of the physical properties conceded to be requisite in a material suitable to withstand alternating compressive and tensile stresses. The failure or destruction of high chimneys by wind storms has invariably been due to the opening of the joints on the windward side from lack of weight or width of base. A chimney or tower designed and proportioned for an allowance of tensile stresses is capable of resisting only a lower wind pressure than that assumed, and thus its power to safely withstand the force is so much less.

DISCUSSION.

The President.—Is Mr. Sweeney present?

Mr. Frank Sweeney.—Gentlemen: This is a surprise to me, to be called on to-night to address an assembly of this kind. My business is brick-laying, and I have built a good many high chimneys of different shapes. I am not prepared to make an address to-night, but I would simply like to call your attention to a case I have run against in connection with the twin chimneys that I built for the power-house of the Union Traction Company, at Delaware Avenue and Fairmount.

This whole building, including the stacks, was built on pile foundation, on which was placed concrete—I think, to a thickness of three or four feet. There was a stone base above the pavement line, probably seven feet high. There is a cornice of terra cotta. The stack is 160 feet high, and about 110 feet above the terra cotta cornice. I noticed, a year or so after these stacks were built, that the terra cotta cornice was breaking. The stacks started to give way from the wall of the building. It is a two-story building. I think at the present time they have left the building by 1½ inches away from its former position. The north stack is two inches away, and apparently still going. I think they have opened up a space half an inch greater than they were a year ago. There is a very slight evidence of cracking, in the stone base, on either side. The piles appear to have settled down. The resistance, or help given to each stack, by the wall of the building, has apparently held them up to a certain extent, and let them go down on the outside. At the top, one stack must be over four and a half inches further south than when we built it, and the other stack is over six inches further north than originally built, and is apparently still going. The brick-work has opened up between the windows, and it looks to me to be a job for somebody to rebuild, some time in the future.

Figure 1 shows the building of the Union Traction Company. The bases of the stacks are shown on the right and left of the building. The stacks (not shown in the figure), as already stated, run up about 110 feet above these bases. Settling cracks can be seen extending upward from the right-hand window in the second story, as also the breaks between the building proper and the bases of the stacks.

Edgar Marburg.—How far was the concrete foundation carried beyond the outer foundation of the stack?

Mr. Sweeney.—That I do n't know. I had nothing to do with the pile-work or the concrete foundation. There was a stone foundation carried to grade. The concrete was probably nine feet below grade, and how far that extended beyond the building line I can not tell. It was put up under the supervision of the late Charles McCaul, and I believe was designed in his office. The stack has a little manhole on the outside. These stacks were built of Philadelphia hard

Fig. 1.—Union Traction Company Power-House.

bricks, faced with stretchers, in red mortar, and lined inside with cores, separated from the outside wall, and at the top covered with cast-iron caps, which I think some day will be dispensed with. I think brick would be more durable than cast-iron. I do n't think cast-iron is the right material for the top of a stack. The bricks were laid in lime mortar, to which was added about twenty-five per cent. Portland cement. Red mortar was used for the outside facing. The stacks

themselves have stood perfectly solid and straight, with the exception that on the west side there are several little cracks, showing a slight expansion.

Mr. Schumann.—Does the flue lining run all the way up, Mr. Sweeney?

Mr. Sweeney.—Yes; to the full height. Thirteen inches in thickness to the terra cotta cornice of the building, and nine inches above. While we are on the subject of flue linings, I would like to ask a question of the gentlemen present, as I want to have somebody tell me whether I am treading on dangerous ground, when I run a circular core up in spiral shape. In building successive courses, if we lay these courses level, and two men are laying the bricks, where they meet, there will be a piece to cut off, which consumes a little extra time. In the full height of the stack, this time amounts to something. I have adopted a plan of running these cores up in spiral shape. In this method there is no piecing or cutting of bricks. It makes a continuous routine from the bottom of the core to the top. If the stack is big enough for three men, I divide it up into three spirals. Usually, with an eight foot diameter, I use two bricklayers, and make two spirals. I have never had any trouble with this method, but I would like some one to tell me whether I am treading on dangerous ground or not, and whether the wall is sufficiently stable to keep me out of trouble. We very seldom put any cement in the inner core. We always have satisfactory results from lime mortar, especially where we use a small proportion of cement in the lime—say, twenty per cent. cement, and eighty per cent. lime mortar. I have used a mixture somewhat similar for engine foundations. In Schemm's brewery, I laid from sixty to seventy thousand bricks for an engine foundation, using lime mortar, to which was added twenty-five per cent. Portland cement, and it is apparently just as hard to-day as if laid in all cement and sand, and certainly less costly.

Mr. Schumann.—Mr. Sweeney, in the spiral, is the vertical joint broken in every operation?

Mr. Sweeney.—Each bricklayer is laying bricks on top of the course just laid by the other man.

Mr. James Christie.—Do you level off when you come to the top?

Mr. Sweeney.—If required. If not, we let it go as it is.

L. F. Rondinella.—That would be similar to the helix of a double screw-thread.

William Copeland Furber.—How do you start the spiral, with split brick or mortar?

Mr. Sweeney.—Split bricks.

Mr. Furber.—I think that is the only bad feature; otherwise it is all right.

Mr. Sweeney.—If bedded properly, the split bricks are just as good as whole bricks.

Mr. Furber.—If the brick is not split properly, you can never tell whether it is sound or not.

Mr. Sweeney.—It is all right if you put back as good material as you cut away. Probably better in some cases.

Mr. Schumann.—Figure 1, showing two similar chimneys joined by an intervening wall, is a good illustration of a method of construction that should be avoided. Most text-books bearing upon this subject distinctly warn against bonded connections between masonry structures of greater and those of less

weight, unless great care be exercised in proportioning the foundation so that the pressure per unit of area on soil be alike. In this case the pressure from the chimney was much greater than that of the comparatively light connecting wall, and the result,—the leaning apart of the chimneys and separation from the joining wall,—as stated by Mr. Sweeney, could have been foreseen.

Mr. Sweeney.—I failed to state before that the front wall of the building was built into a slot left in the stack wall. That slot was four inches into the stack and twenty-two inches wide.

Mr. Schumann.—The foundations ran through?

Mr. Sweeney.—Yes; the slot was not started until the top of the stone base was reached, which was about seven feet above ground-level.

A Visitor.—I should like to ask Mr. Sweeney if he noticed any cracks in the north and south walls of the chimneys.

Mr. Sweeney.—I did n't go into the yard north or south to look at the returns. I did n't look for cracks in the sides, but simply noticed them on the street front. I imagine there would be nearly as much on the sides as showed in the front, because the terra cotta cornice appears not only to have gone north and south, but east as well. It appears to be separated about two inches toward the north and south, and one inch to the east, showing that there must be a crack on the opposite side of the chimney.

Prof. Rondinella.—It might be interesting if we could hear some impartial testimony as to the economy in using artificial draft in place of high chimneys.

Mr. Christie.—Mr. Snell can probably tell us something about that. Is he here?

Henry I. Snell.—I do not know that I have much to say to-night. There are some points brought out in the papers before the Club this evening which I would like to make use of in a comparison of some of the advantages of mechanical over chimney draft.

In the first paper, the author states that one of the chimneys, shown and described to the members, was designed for a boiler plant of two thousand H. P., and that it cost $12,250, or about six dollars per H. P. A mechanical draft apparatus complete and installed ready for use, including fan, engine, and air-distributing pipe for plants of this magnitude, will cost, on an average, about one dollar per H. P. The advantage of mechanical draft over natural draft by this illustration is $5.00 per H. P., or $10,000 for a 2000 H. P. plant.

In Mr. Schumann's able paper on the theory of natural draft as applied to a chimney for steam boilers, I notice he makes use in one of his formulæ of the figure 650 as representing the volume of air in cubic feet required for the combustion of one pound of carbon or pure coal. I assume that this figure represents the volume when expanded by a temperature of about 550° or 600° F.; in other words, 650 cubic feet of escaping gas must be provided for each pound of coal, of good quality, consumed on the grate.

With natural draft it is considered good practice to allow 300 cubic feet of air of the outside temperature for each pound of coal consumed in the furnace, and this volume expands to twice the amount when heated to 550° to 600°. Considering the variation in the quality of coals, and the losses and wastes in combustion, it may be considered good practice, and I believe a usual one, to allow four pounds of coal per hour per H. P. From these figures it is possible to make some calculations by which we can compare the relative merits of natural and mechant

ical draft in regard to their economies. Taking the chimney and plant already mentioned and described to the members of the Club, we have $2000 \times 4 = 8000$ pounds of coal to be consumed per hour, requiring $8000 \times 300 = 2{,}400{,}000$ cubic feet of air. One unit of heat will raise about 52 cubic feet of air one degree; therefore 2,400,000 cubic feet of air raised 200° will require $\frac{2{,}400{,}000}{52} \times 200$, over 9,000,000 units of heat, and allowing 10,000 B. T. U. as the heating power of a pound of coal and four pounds per H. P., it is readily seen that $\frac{9{,}000{,}000}{4 \times 10{,}000} = 225$ H. P. is lost in the economy of the boilers by the necessity of requiring at least 200 degrees higher temperature to produce draft than utilized by the boiler in generating steam.

The power required to run an engine driving a fan of the proper size and speed to supply the boiler furnaces with the same (or a less volume of air, for less is required with forced draft, as the combustion is more complete than with natural draft), to produce equal results, will not exceed, with proper installment, 16 to 18 H. P. A much greater economy will be shown if the waste heat is utilized by the adoption of fuel economizers for heating the feed water, which can be easily accomplished by the use of a fan and is not economically practical with chimney draft. A high temperature of escaping gases is not necessary with fan blast, and, without high temperature of escaping gases, chimney draft is impossible.

Another advantage of mechanical draft over natural is its flexibility for increase of boiler capacity and rapidity of steaming requirements. The point aimed at in this discussion is to show by the illustrations before the Club that some of the relative merits of mechanical over natural draft are that it costs about one-fifth as much to install and one-twelfth as much to run.

The calculations here presented are those obtained in a general way, and show the relative economy of forced draft over chimney draft under similar conditions. Even this economy, already shown, can be greatly increased by the application of fuel economizers and induced draft application, for then the escaping gases can be reduced to 200° or 250° instead of about 400° as used in the previous calculation. For economizers and coals of small size, mechanical means for increasing the intensity of draft I believe to be a necessity.

Mr. Christie.—Do you believe in pushing the air in or pulling the gases out?

Mr. Snell.—That often depends more upon circumstances than advantages. In ship or other work where there are advantages to be derived from the ventilation or cooling of the lower decks, holds, and engine-room of a ship or basement rooms of a building, and where it is convenient to have them closed tightly and a plenum system used, or where the space is cramped for room and it is difficult, sometimes impossible, to run proper sized air pipes to the furnaces from the fan, induced draft or "pulling the gases out" is undoubtedly preferable.

For mechanical plants with the usual stationary boilers,—such as we find in factory plants or workshops,—considering the first cost, and sometimes the disadvantages of a distant location of the fan, also the fact that a "pulling out" arrangement pulls cold air through the porous and cracked brickwork of the boiler walls into the heating chambers and thus cools the heating gases without aiding combustion, and, for some other reasons, I generally prefer forced blast system under the grates.

Owing to the expanded condition of heated air with an induced system, we are obliged to handle twice as many cubic feet of air to contain the same amount of oxygen as we do with forced draft, and consequently have to use larger fans.

NOTES ON THE CONSTRUCTION OF A FACTORY CHIMNEY.

I. WENDELL HUBBARD.

Read April 20, 1901.

The factory chimney is becoming so much a part of our landscape that these notes, although recording no serious difficulties encountered, may have sufficient bearing on chimney construction generally to commend themselves to your attention.

In July of 1900, in connection with the construction of a manufacturing plant for Mellor & Rittenhouse Co., at Camden, New Jersey, the erection of the chimney from which these notes were made was begun. The chimney is located 225 feet from the Delaware River, and is 218 feet in height from the bottom of foundation to top. (For details of the structure see Plate II.)

The first step, naturally, was the excavation for the foundation. Having had occasion a week or so earlier to drive a well within 30 feet of the proposed location of the chimney, we obtained from borings excellent data as to the materials most likely to be encountered in the digging of our foundation.

The size of the pit excavated was 34 feet 3 inches square. The surface of the ground was about +10 or 10 feet above mean low water in the Delaware River. To a depth of 3 or 4 feet below the surface the material excavated was a heavy ballast deposited at former times from vessels. Below this was found a sand and loam, which, when wet, would run like quicksand, necessitating the driving of close sheet piling. This sheet piling was 3 × 12 inch plank 18 feet long, driven around a framing of 10 × 10 yellow pine timber. At a depth of 3 feet above mean low water, or +3, water was encountered, although not enough to cause any serious trouble. By keeping two pumps running we managed to keep the pit practically free from water. At a depth of 16 feet below the surface, or —6, the gravel bottom was reached, coinciding with our observations from well boring.

From this level the foundation was started, using a concrete of one part Portland cement, two parts sand, and five parts of broken stone.

PLATE II. HUBBARD. NOTES ON THE CONSTRUCTION OF A FACTORY CHIMNEY.—*Proceedings of The Engineers' Club of Philadelphia*, Vol. xviii, No. 3 (July, 1901)

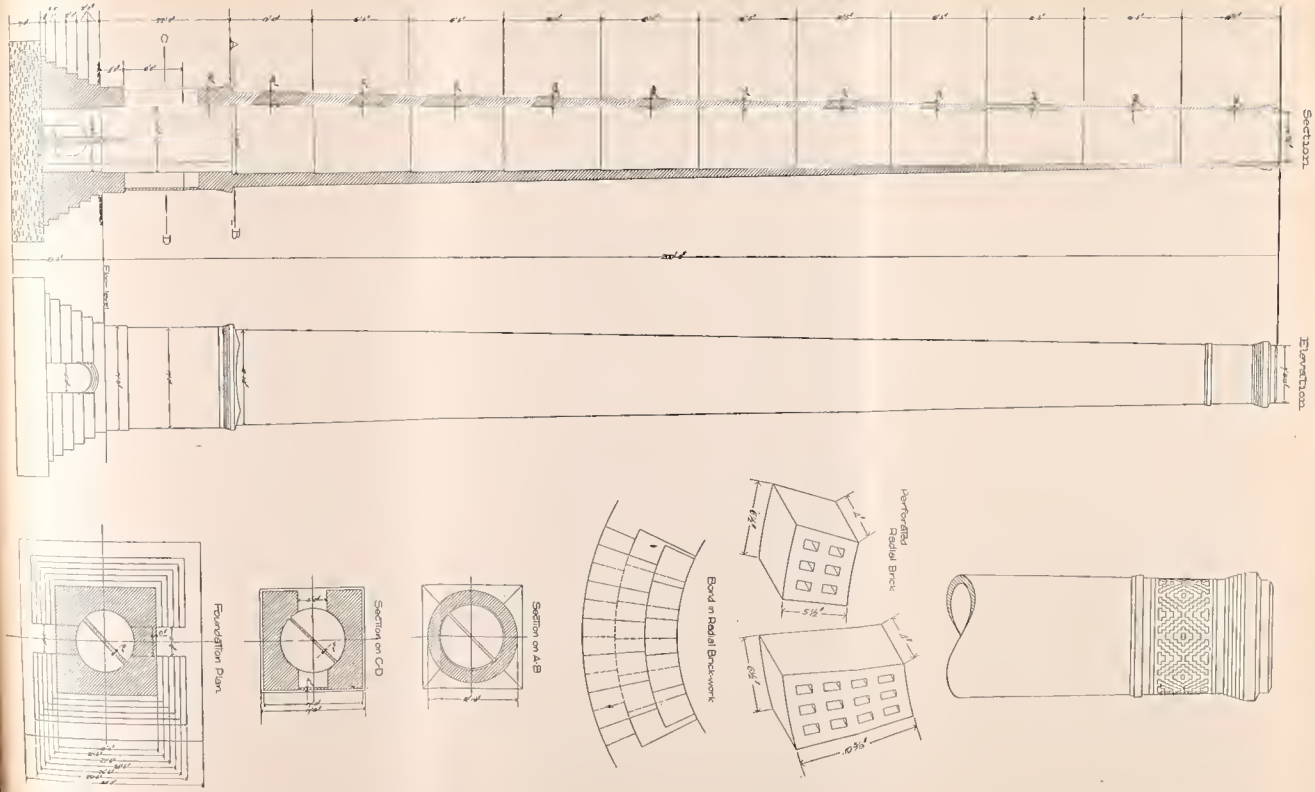

The concrete was mixed dry, with the exception of wetting the broken stone, there being sufficient water in the pit to give the proper consistency. This was mixed above and lowered in buckets carrying one yard each. The concrete was carried up to a level of +1, or 1 foot above mean low water, being thoroughly tamped as the work progressed, and forming a mass 7 feet in thickness and 34 feet square, weighing approximately 526 tons. The concrete was allowed to set for a week before the brickwork was started.

Common red bricks manufactured by the Sayre & Fisher Co. were used in the construction of the base above the concrete, and were laid in Portland cement and sand. This brick base was 28 feet 6 inches square. The chimney was laid out immediately on top of the concrete footing with an internal diameter of 10 feet 8 inches, and was pierced on the south side by an opening for an underground flue 5 feet 10 inches wide and 5 feet to the springing line of a semicircular arch which was put in with four rowlock courses. This brick base diminished in size from the outside by successive steps of 12 inches, the first step occurring at a height of 1 foot above the concrete, and the succeeding steps at intervals of 2 feet each, which continued until floor level, or +12, was reached, at which point the foundation was reduced to 18 feet 6 inches square.

The weight of the brickwork between the concrete and the floor level is approximately 360 tons. Above the floor level, to a height of 22 feet, the Sayre & Fisher red bricks, laid in lime and cement mortar, were used; the thickness of the first level of brickwork being 40 inches, at its least dimension, the stack at this level having an internal diameter of 11 feet, this diameter continuing up to 22 feet above the floor level, where it increases to 11 feet $9\frac{1}{4}$ inches. The same wall dimensions continue up to the underside of the upper flue, which is 4 feet above the floor level, or +16. The height of the opening for the upper flue is 10 feet to the springing line of arch, the latter having a radius of 2 feet 6 inches, the thickness of the arch being 16 inches. The thickness of the wall above this bottom of flue is 36 inches at its least dimension. With the exception of the corbeling out, this same thickness continues up to the beginning of the radial brickwork.

Twenty-two feet above the floor level the exterior of the chimney takes its circular form. The bricks used in this portion were the perforated radial bricks manufactured by the Alphons Custodis Chimney Construction Company. These bricks, made in several sizes, are perforated in a vertical direction, the perforations being about $\frac{3}{4} \times 1\frac{1}{4}$ inches. In a brick $10\frac{5}{8}$ inches long there are 15 perforations, and 6 in a

$5\frac{1}{2}$-inch brick. The external faces of all the perforated bricks are $6\frac{1}{2}$ inches wide by 4 inches in height. The sides of the brick are determined by drawing the radial lines to the center of the circle in which it is assumed the brick will lie.

The bricks for each level are stamped with a different number, indicating to which level they belong. In laying, care was taken to break joints.

The thickness of the first level of radial work was 26 inches, extending upward 13 feet 10 inches. The next level is 16 feet 5 inches in height and 24 inches thick. Each successive level is 16 feet 5 inches in height, the thickness diminishing in the following order: 22 inches, $20\frac{1}{8}$, $18\frac{1}{8}$, 17, 15, 13, $10\frac{5}{8}$, $8\frac{5}{8}$, $7\frac{1}{8}$.

The corbeling out of brick for ornamentation is confined entirely to the last level. The inside diameter at the top is 8 feet 6 inches.

From the bottom of the upper flue opening, iron rungs were built in the brickwork, forming a ladder to the top of the chimney.

A lightning rod, with four points at top, was placed on the stack after completion, running into the ground below the water-line.

From the bottom of the lower flue opening to a point 22 feet above the floor level, a baffle wall, having a thickness of 8 inches below and 4 inches above the floor level, was built.

When the chimney was about half completed, a test was made with a transit, and the center was found to be about half an inch from its proper position. This error was gradually corrected.

The materials for construction were raised in buckets by a steam hoisting engine. The work was done from the inside from platforms erected as the work progressed, the platform also supporting the tripod holding the pulley wheel through which the hoisting cable ran.

In summary: The stack stands 218 feet high, including foundation, the base of the stack covering an area of 1156 square feet. The total weight of the stack is approximately 1640 tons, with a distributed load of 1.42 tons per square foot of bottom area. It was designed for 2000 horse-power. The total cost was about $12,250.

FIRE-PROOF CONSTRUCTION IN PHILADELPHIA.

EDWIN F. BERTOLETT.

Read May 18, 1901.

A GENTLEMAN prominently connected with the Insurance Patrol of Philadelphia, in conversation with me a few days since, said: "There is but one fire-proof building in Philadelphia; that is the powder magazine, and it is empty." As I walk Broad Street I see emblazoned against the night sky the words "Fire Proof" in a blaze of electric fire, but this is not the powder magazine over which the title stands. These two apparently conflicting opinions form basis for serious thought and research. It will be the aim of this paper, to an extent, to direct attention to the developments of the past and present in the matter of rendering our structures invulnerable to fire and flame. To discuss, in detail, the chemistry of combustion, its peculiar effect upon all classes of material used in building operations, and the mathematics of various forms of construction will require greater length of time than we have at command for a brief paper of this character. Each in itself forms an interesting chapter. Neither shall I attempt to discuss what is termed slow-burning construction or the devices and methods for the retarding of fires in otherwise combustible buildings. I shall endeavor to consider only that class of construction which makes for absolute indestructibility, though I can not but feel that the present condition of the science of fire-proof construction is an aim at or a striving for, with a manifest consciousness of the almost impossible attainment of, the ultimate; and since we are to review the interesting past developments of the art of fire-proof construction through the medium of present practices and intervening experiences, I think it will be profitable to consider at the outset some phases of the present status of practical fire-resisting and fire-proofing work, and thus clear the environments of the past and early attempts of much that has proved highly illusive and in some things wholly erratic. Progress has surely been made, though many sacrifices are made to commercial expediencies; there is much that is still experimental in the present practices in fire-proofing work. The past thirty

years have served, by many costly and humiliating lessons, to impress the essential character of much that was formerly regarded only as superfluous; other things that have been deemed highly important have been eliminated. It has been proved that non-combustible and non-inflammable are qualities by no means the synonym of fire proof; that the same processes which produce, under certain favorable and fixed conditions, sometimes destroy under slightly modified or varied conditions. The destruction by fire is a question of intensity only, and as the floor and supporting loads vary in classifications of buildings, and a building designed to carry a load of 100 pounds per square foot of floor should not be required to carry 200 pounds per square foot, so a building designed to be fire proof for one class or purpose can not be expected to be fire proof when occupied with much more highly inflammable materials, and the application is just as direct, practical, and reasonable in one case as in the other. Time and experiences have served to prove that metals can not, even in incipient fires, be regarded as safe, when exposed to its action, and that almost the entire line of building-stone in common use has proved a very temporary barrier to flame and heat, while at this time serious consideration is given that paradox of modern material, fire-proof wood.

The conditions referred to have complicated the work of the architect and engineer, not only with the obligation of providing for supporting and staying the structure, but with covering the structural features with defensive armor of fire- and heat-resisting materials of such form and character as will render the same acceptable to the taste and comfort of the occupant. And this obligation has assumed most dominating importance; it has puzzled inventive genius and interested capital; it has built high hopes, fostered great expectations, and overturned the logic of philosophers; and to-day it remains largely a question of degree. We require, without doubt, many inconsistencies. As a rule, side wall supports are much better protected than interior columns and girders, simply because it is convenient so to do; outside walls are protected, according to city regulations, with eight inches of brickwork or six inches of terra cotta against the more remote consequences of a fire across the street, and yet many interior supports are deemed amply protected with a mere fraction of this thickness; severe and exacting law requires that each and every small property be divided from its neighbor by an ample fire-wall without communication therein, and yet a third party may fill a whole city block with story upon story of the most inflammable of buildings and tier upon tier of merchandise, suffi-

cient in itself to destroy a city ward, provided he is satisfied with his share of the risk; the most defensive walls are left with the most vulnerable openings, for commercial reasons; and these things are done in the light of our knowledge of materials and their properties, in the face of admonition and experience, and with apparent disregard of the consequences; consolation is taken in the confession that the fire-proof building is an ideality, not a reality; that no one has yet been able to produce, or at least has not had the courage to produce, the absolutely fire-proof structure; that is, one in which the combustible contents of a room or an apartment may be damaged or consumed by fire without affecting those of an adjoining apartment, floor, or building. The term fire proof, therefore, must be considered, like the morals of men, a relative term; each building must continue to bear a certain relation to those adjoining; the standard of immunity from destruction by fire is raised by the fire-resisting qualities of its neighbors, and every fire-proof floor, roof, and other detail introduced counts for just that much of an advance, and while the days of test and examination of materials are upon us, and while we have been gradually emerging from the experimental stage, still hesitating between correct methods and commercial expediencies, vast quantities of detail fire-proofing work offer the broadest field for most careful consideration. Light wells, elevator shafts, corridor partition lights, doors, trim, and floors are all subjects, so far as Philadelphia is concerned, still receiving comparatively primitive treatment in the finest and largest office and apartment and hotel structures; and though heralded as fire proof, contain much unnecessary and superfluous woodwork, and the most combustible furnishings, the absence of which would not only reduce the fire risk, but add much to the sanitary condition of the structure. The furnishings have an important bearing upon the fire-resisting qualities. The contents of home or store, hotel or warehouse, can not be fire proofed, but much can be done to lessen the rapid spread of fire in any building; much inflammable matter is exposed in our offices that should be placed in the fire-proof vaults and receptacles. Simplicity of furnishings will improve our homes, hotels, and apartments. In our stores and shops less inflammable tables and shelves bearing non-inflammable goods should alternate with the more inflammable goods, and in warehouses areas should be reduced and divided in minimum dimensions for the purposes by means of suitable and approved fire walls, doors, and partitions, which may in many instances be made part of the structural design and not a mere adjunct or extra.

The absolutely fire-proof house or building will have no wood in its construction unless it be fire proofed; it will have its doors and windows of incombustible materials, and the more vulnerable parts of these will be protected against the direct contact with flame and heat. Its floors will be cement or tile finished as well as cement or tile constructed, the light will be admitted through fire-resisting glass, and direct communication between stories will be through stairs or elevators placed in special fire-proof shafts, with which communication will be had by fire-proof doors only. Partition lights or sashes and communicating openings will be reduced to a minimum, all corridors being directly lighted from the exterior; all heatings, lighting, and other communicating features common to all parts of the structure will be placed in separate and special fire-proof ducts or shafts, closed at each floor with metal or fire-resisting doors. In short, each apartment, and therefore each building, will be at once convertible, in emergency, into a furnace or crematory, in which, without injury to any other apartment or building, the contents thereof may be utterly destroyed, for the conditions under which all the *contents* of our stores, our homes, our shops, and our offices will in themselves resist fire can not at this age be anticipated.

Prior to the production of the rolled iron "I" beams in the year 1854, the only form of fire-proof construction of floor system that we find in our city and suburbs, and of which some good examples are still to be seen intact, was or is the brick groined arch, which with all its oppressive stolidity, its obtrusive monotony of interior effect, its extravagant occupancy of space and head room, and voluminous masses of dead materials, as a fire-proof form of construction pure and simple is one for which no apologies need be, and no unfavorable comparisons with more modern methods can be, made. This form of construction was in universal use by the Government at that period for record rooms and offices; it is now to be seen in many State capitols and numerous court-houses, and in Philadelphia is notable in the front part of the Franklin Institute Building, and was the form of construction used in the court-houses which formerly flanked Independence Hall, since removed during restorations. As usually constructed, it is faultless of iron ties or supports, the intersecting arches are usually of such full segment form as to confine the lateral thrust within the safe overturning moments of the abutting walls and corner piers, the back spandrels being usually filled to or above the crown of the arches with a solid mass of bricks or stone and cement or mortar, and the plastering being placed directly on the soffit of the brick arches; the very homogeneity of the entire con-

struction was a sufficient guarantee of the strength and fire-proof qualities of the entire mass, and the interior effect is not unpleasing, but, in contrast with the usual flat ceiling, possesses an interest, a dignity, and a uniqueness of its own.

The illustration shown is from the court-house at West Chester, built in 1846, designed by Mr. T. U. Walter, Architect. This work is confined to the entire first story and basement, in the first of which are

Fig. 1.—Interior Court-house, West Chester.

located the various court offices; the second story being divided entirely by brick walls, but surmounted by wood, ceiling and roof construction, and occupied by the court-rooms proper. The entire construction is of such solid proportions that no reasonable doubt can be indulged of the entire safety of the offices below, even though the rooms above were to be entirely destroyed. The windows and doors are further protected by heavy plate-iron doors and jambs throughout the ground or office floor.

Floor systems of this character are enormously heavy. The arches

at court-house row have been estimated to weigh 217 pounds per square foot by Mr. Merritt. Those at the West Chester court-house are even heavier than this. The strength of the groined brick arch construction is measured entirely by the crushing strength of the brick and mortar used in the vaulting and the stability of the abutment walls. It is a system, of course, wholly inapplicable to our modern needs, and even then was confined to lower stories of structures of very moderate height.

The next signal advance, if it may be called such, in the matter of construction of fire-proof floor system in Philadelphia building work was coincident with the introduction of the manufacture of "I" beams in this country. There are a few instances of the use of cast beams for floor construction prior to the use of the rolled wrought-iron I beam, but they are at this time only of interest as a historical fact, as illustrating the total lack of knowledge upon the subject of the effect of fire upon cast-iron, rather than one showing any advance in the structural arts or being of any scientific value whatever. I am not advised that such cast-iron floor systems were used in any important Philadelphia work outside of a few of the older brewery warehouses, where the purpose was not so much to provide against fire as to avoid the weakening and rotting out of warehouse floors, that were subject to frequent inundations, from overflowing and washing of the large vessels used for storage of the liquors.

The manufacturing of rolled I beams, having been begun successfully at Trenton, N. J., in 1854, one year after their first production in France, gave the first essential element of the modern fire-proof floor, and although it is claimed they were first used in a neighboring city, Philadelphia architects and builders were quick to avail themselves of the opportunity to improve the durability of their work, and several buildings using I beams of the first or early production remain to bear witness to that important period. Evidently, under the misapprehension that iron, like brick, was a fire-proofing material, in all cases for a number of years no effort was made to protect the iron posts, beams, and girders in any part that could be conveniently left exposed; in rare instances a flat ceiling extended below the flanges of the floor beams, but no effort was made, in this, to afford the ironwork what was then regarded as useless protection. In a majority of the structures of this period, the concave soffits of the arches between the beams were developed into a concave panel by means of a plaster mold run on the lower flange of the supporting beams, and the same mold continued along the

wall at the ends of the beams, immediately under the flanges of the same. This form of construction has been used in a large number of public and private buildings in and throughout the city, among the oldest of which, if not the oldest, is the Lehigh Valley R. R. Co.'s buildings at Third Street and Willing's Alley.

It is the form of floor system used in many banks, and the City Hall is thus floored throughout. The best form of I beam and brick arch construction was always laid with hard bricks in cement mortar, starting on the lower flanges with a molded brick skewback brick against the web of the beam, and with the arches laid with broken joint over a wooden center supported also on wrought-iron hooks from the same lower flanges, the arch having a rise at center of from five to eight inches, in spans of from four feet to five feet six inches, filled in the back to and above the beams with concrete, in which nailing strips to receive the floors were always embedded. This form of floor, for many purposes, was, and even now is, sufficiently near fire proof to serve the purposes of its origin; but its weight when backed out with concrete is much greater than is necessary; it can never be used in any connection without the rigid cross-tying of the iron beams against the lateral thrust of the segmental arches of brick. The average weight of a floor system of this character, including the supporting beams, backing concrete, and brick arch in spans of five feet, is about 100 pounds. Its ultimate strength in cement mortar for uniform loading (?) is measured, if hard bricks are used, by the strength of beams and ties, rather than by the brick arches and concrete backing.

The early attempts at fire proofing were almost entirely confined to the floor system and iron columns, and in connection therewith wood stud lath and plaster partitions are only too common.

Hollow burned clay tiles, for floor support, were used in this country, I am advised, in the Cooper Institute in New York almost as soon as I beams were available for the purpose of supporting them, but their use was not general; the brick arch of one and two bricks on edge between iron beams continued for years to be the acceptable means and the ultimate measure of fire proofing buildings, and, strange as it may seem to us now, beyond an iron or stone stairway and a floor system of I beams and brick arches, but little advance in the matter of fire-proof construction can be noted in the building work of Philadelphia from 1860 to 1885.

During this period a Philadelphian named Gilbert devised a corrugated sheet-iron centering with a skewback engaging the ends of the

same, fitted to the angle of lower flange of I beams. This found but limited use, however, and while, in itself, in light of more recent investigation, far from fire proof, yet with the great depth of concrete necessary to fill the space to or above the supporting I beams, considering the thin metal used, it was at least but a very slight retrogression, if any, from the brick arch, in use of both of which lateral tie rods were necessary between the beams; the lower flanges were protected in neither. The sole advantage of the Gilbert method of construction would seem to be that it formed or provided its own centering, in which feature we shall find its counterpart in more recent practice in other materials.

This form of so-called fire-proof construction would seem to be little more than a concrete arching, with the metal centering remaining in place, in many locations doomed, by reason of its exposure to early destruction, and at any time of comparatively small independent strength, since an eccentric loading will cause the naked centering to yield sufficiently to disengage its support on the lower flange of the beams.

This form of floor presents nothing novel to our present view of the matter, and is chiefly interesting as being a Philadelphia product.

The first use of hollow clay tile and iron beams in our city of which I can find any record is still extant in that pioneer modern office building, designed by Mr. Addison Hutton, at Fourth and Chestnut Streets, and popularly known as the Wood Building. It was erected in 1881. The side construction hollow terra cotta arch floor system produced by Henry A. Maurer & Son was used; no effort was made to cover the lower flanges of the beams, excepting with a coat of cement between the slight projections of the tiles, which received the mortar or plaster direct. The building is, of course, far from proof against fire; the posts and girders of iron are all exposed, an open stairway, an elevator shaft, and an open light shaft, extending from first floor to roof with a wood-trimmed sash inclosure all around the four sides, would turn the whole structure into a furnace with great promptness; but the building is, nevertheless, a step toward reducing dead loads of fire-resisting floors to rational weight, which even at this day remains too high.

An American patent was issued to F. A. Peterson on hollow tile floor construction of burnt clay and I beams, or the equivalent of the latter in deck beams, or double channel beams, as was actually used in one of the first buildings. The date of this patent is April 3, 1855; as shown in this drawing, the beams were set but two feet six inches apart, and a single hollow tile filled the space between, projecting but slightly below

the flanges of the I beams; their introduction was not extended, and throughout the country little attention seems to have been given the subject until after the great Chicago fire, in 1871, when a limited number of floors were laid on iron beams and terra cotta tiles both in New York and Chicago; but not until after the advent of the modern office build-

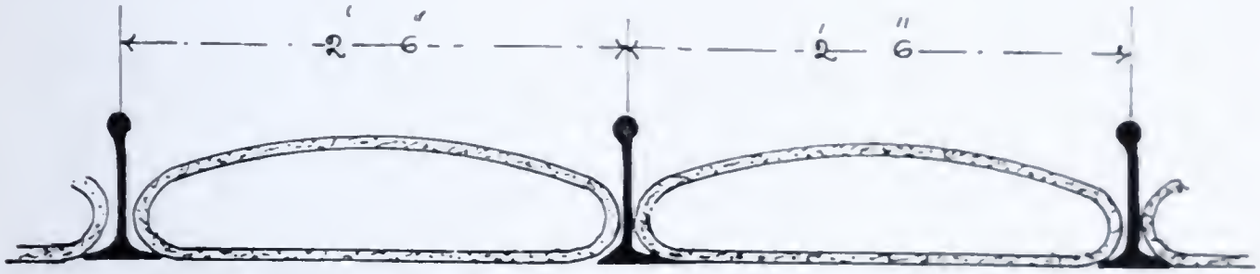

First American Patent Hollow Floor Tile, Cooper Institute, issued to F. A. Peterson, Architect, April 3, 1855. Made by hand.

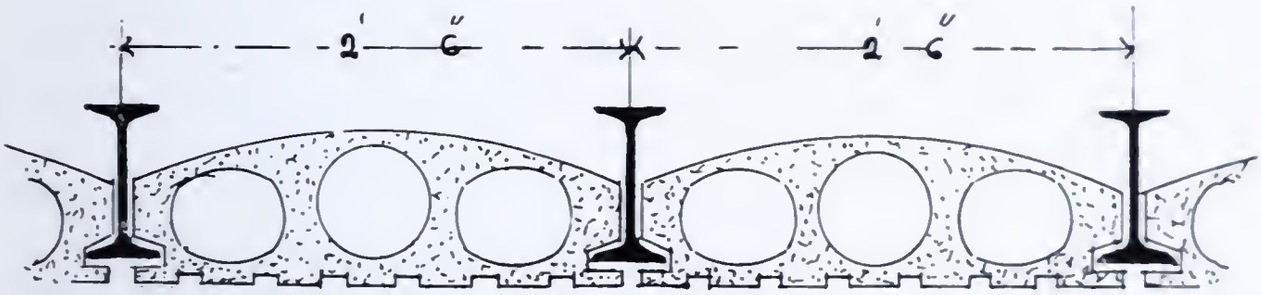

American Patent, issued August 21, 1866, to Maurice Anbord.

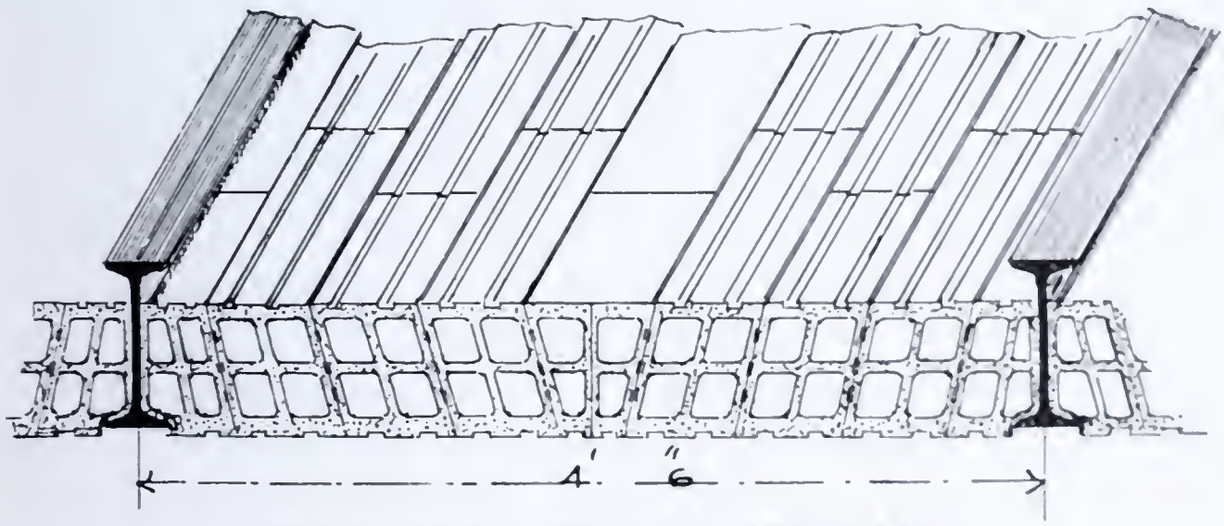

Flat Arch, made in 1875, by Henry Maurer & Son.

Fig. 2.—Types of Early Floor Construction.

ing—the first of the species being the Montauk Block, Chicago, in 1881, coincident with the construction of the Wood Building in Philadelphia—does the serious introduction of fire-proof floors in business and hotel buildings seem to have obtained consideration.

This period was soon followed by the advent of the sky-scraper and the use of light, incombustible, and strong floor and wall materials, for these were at once recognized as an imperative necessity. Philadelphia's first successes in this line, the Girard Trust and Drexel Buildings, the latter of which erected in 1887, has a floor system of steel beams and terra cotta arches on an iron or skeleton frame, faced with white marble on the exterior and backed on the frame with hard bricks. It is, fortunately, situated among buildings in which fire-retarding or fire-resisting materials largely prevail, with much intervening space all around it, and is therefore, perhaps, as secure from damage by fire as any building in the city; with the marble envelope of its iron frame in a more exposed position, or in closer proximity to combustible buildings, the damage from an adjoining fire might be very great. From this period to the present time a great variety of fire-proof floor systems have been proposed and a large number of them introduced into Philadelphia buildings. Limited time will permit a hurried consideration of a few only of the more favorably considered, together with some of the minor fire-proofing building details and devices.

While the range of materials now recognized to be available for fire-proofing purposes, either independently or directly, as the filling between floor beams, for construction of the principal and minor subdivision walls, ceilings, or roofs of fire-proof buildings, or for the protection of the metallic members for the reception and transmission of the chief strains from the loading, both dead and live, and from storms and wind, has narrowed to a small list indeed, much ingenuity has been expended in devising varied forms and means for applying them, and in as varied combinations; we find in Philadelphia, for protection to skeleton framing of some very high and important buildings, such combinations as bricks and limestone, bricks and granite, granite and marble, and, in a few instances, marble and granite alone. Of these, the bricks and terra cotta alone can really be considered a fire-proof material, granite and marble cracking and crumbling badly under the action of heat, and with much greater violence upon the application of a hose stream during a fire. The more recent structures, however, have been almost entirely constructed with brick and other forms of burnt clay facings above the few lower stories, marble or granite work being, as a rule, confined to the entrances and facing of the ground floor, where in event of a fire the effects of heat would be least marked.

With reference to floor systems in practical use, the varied forms and combinations of materials are much greater than those for exterior walls

and coverings, the terra cotta arch of hollow tile in itself having been used in not less than ten distinct forms, for bridging between and protection of the lower flanges of the I beam joists; besides which we have in use floor systems, combinations of bricks, iron ribs, and concrete, with wire lath and cement plaster ceilings for beam protection, as in the Real Estate Trust Building and "North American" Building; or stiffened wire lath and cement floor and ceiling beam protection, as used in the Philadelphia Bourse; combinations of terra cotta, lintel, and concrete, as used in the Lorraine Apartment House, Broad Street and Fairmount Avenue; expanded metal and cement floor and ceiling protection, as used in the Gibson Building; iron rod or bar and cement floor system with metal lath and hard plaster ceiling protection, as used in the Columbian Fire-proof Floor System in the office and store building at Twelfth and Chestnut Streets. The cement arched floor system, as used by the Vulcanite Company on permanent calcined plaster centerings in the Stetson mills and office, at Fourth Street and Montgomery Avenue, represents the combination of plaster board and concrete fire proofing and beam protection, while the Keystone Plaster Company, of this city, with works at Chester, has produced a fire-proof floor arch, using expanded metal in combination with specially treated calcined plaster cast into protecting skewbacks for the iron girders and floor beams, and a single arch block to be used between. It is probably inevitable that a field so attractive, from both a scientific and commercial standpoint, for experiment and profit as the fire proofing of buildings, should lead to the proposing of many peculiar and almost freakish devices for the purpose, and many others which, by reason of the prohibitive cost, excellent though they may be, eliminate them from the competitive field of practical work.

One very worthy firm has offered the public a device for fire proofing wooden joist systems by surrounding them entirely with concrete, for which purpose it was proposed to attach to either side of the wooden joist angle irons of such form as to lend the strength of its camber to both the joist and the concrete; in the light of what has been accomplished with concrete in combination with iron bars, or spans fully as great, it might be asked, Why use the wooden joists at all?

Terra cotta ceiling blocks and wire and metal lathing have been and still are being offered as a fire proofing for wood construction. They can only be considered when of such proportion and quality and applied to such bearing members as insure their stability both in the presence of fire and in the subsequent application of water under heavy

pressure from modern fire-extinguishing appliances; indeed, the same is emphatically true of every fire-proofing material worthy of serious consideration.

A comparatively new form of hollow tile floor system is now being introduced by Maurer & Son, clay and terra cotta manufacturers, known as the "Herculean Fire-proof Floor System," which, from the past success of the firm and the reliable and standard character of all their former products, is worth careful consideration. Tests, both as to strength and fire resistance, have shown—the latter in experimental cases only—very satisfactory results; it is perhaps the most nearly homogeneous terra cotta floor construction yet produced.

It consists of a series of end-construction, hollow, terra cotta tiles,

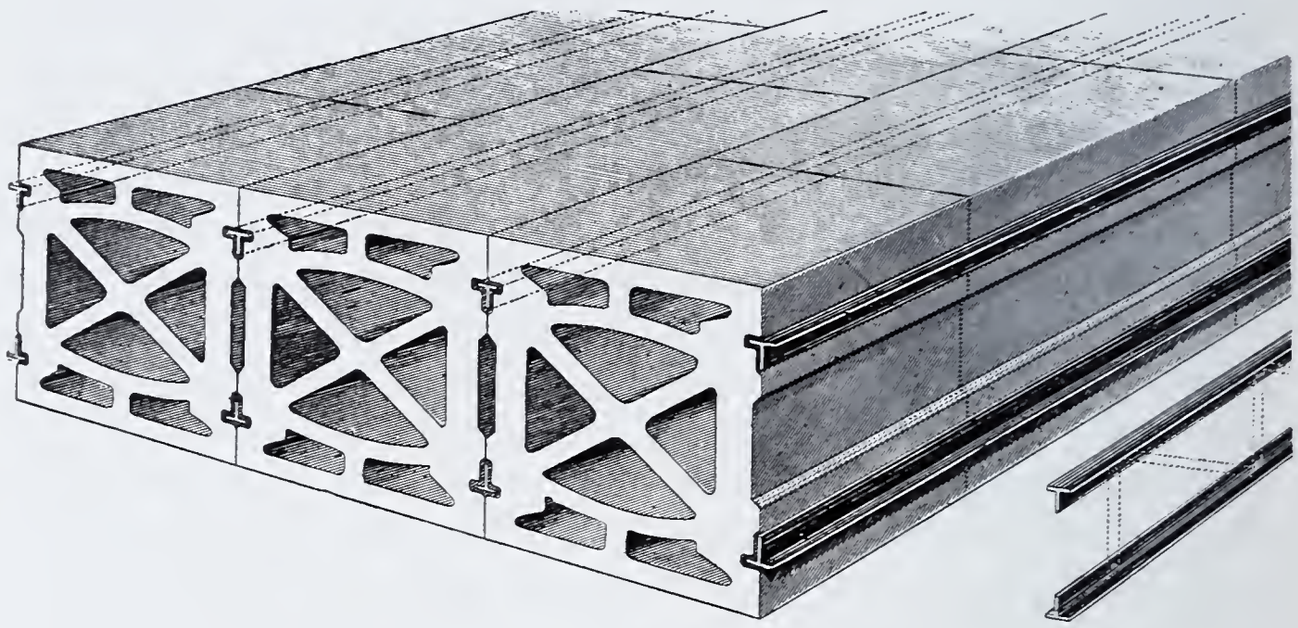

Fig. 3.—"Herculean" Flat Arch.

varying in thickness from six to twelve inches, according to the span and weight to be carried. In plan these tiles are 12 inches square, and along either side joint, within a safe distance from the tops and bottom face of all tiles, runs a continuous "L"-shaped groove to receive in a cement joint a two-by-two-inch rolled "T" iron, which is made of the proper length to extend the full span of the floor systems, from wall or support to support. The tiles are carefully set in place on wood support or so-called centering, the "T" irons cemented into top and bottom of all joints, the tiles being carefully cemented throughout all joints as they are set, and the whole left to set up for a time; the end blocks are given a bearing with "T" irons of four inches in the supporting walls or girders. This system of terra cotta construction demands more than ordinary care in setting; a large amount of iron beam work is eliminated,

and the "T" iron ties, for they are only such, are so thoroughly protected by being embedded in the terra cotta that no failure through the iron members can be considered probable.

I have examined some spans of this system of twenty feet clear, after being in place for a month; have noted the wonderful rigidity, natural elasticity, and other attractive qualities. There is in place now in a small building on Uber Street a floor of this form 18 by 20 feet, which I have had loaded with 600 pounds per square foot with very slight deflection. The strength of the floor is, of course, developed by the continuous character of the "T" iron ties and the compression of the top members of the terra cotta blocks, with the possible tensile bond of the lower members reinforcing the same; exceptional care would seem to be necessary, in the proper adjustment of all the joints and bearings, in fitting and cementing the various blocks of this floor in place, and it would seem of special importance that the cementing of the "T" iron ties in the groove at side of the blocks should be of the very best material and executed without fault.

The terra cotta floor fire proofing in common use in Philadelphia is of two general forms; as used in the early practice and at this time where the ceiling finish is not a critical matter, it consisted of segmental arch of a hollow tile skewback and a series of hollow tile voussoirs, which are set between the rolled I beams with cement joints, the back and haunches of these arches being filled above the I beams with cement and cinder concrete, in which the floor nailing strips are embedded at intervals of sixteen inches centers; the skewbacks in all more recent cases forming the beam protection. There are points of weakness in this form of construction, however, as the radial webs forming part of the joint are subjected to practically the same pressure as the top and bottom horizontal or arch webs, jeopardizing the tile; to overcome this difficulty, and for the purpose of affording a flat ceiling, the form known as end-construction arch is now almost universally used in terra cotta floor work. These are made up of beveled-face skewbacks and key blocks of same bevel, the voussoirs also of same bevel, on account of the difficulty and complications arising in the manufacture and the sorting and handling involved in setting in proper position blocks of radial jointing, it having been found impracticable to confine the construction to radial joints. Thus it will be noted that in each arch section but three forms of blocks are required, the skewbacks on either side being of precisely the same form; all voussoirs are similar, though set on opposite sides of the key, the key

itself being the third form. The voussoirs are further interchangeable by making both the top and bottom beds or soffits and top corrugated or dovetailed to receive the plastering work, and are reversible either by inverting or reversing endwise on alternate sides to the key. It is important that the direction of the line of pressure, and therefore the tangent or secant at right angles to the joint, fall within the central third of the depth of the arch in order to insure the perfect stability of the whole arch. Much, further, depends on the care and skill of the workmen in setting the mortar for the various joints, since pressure is so directly and continuously transferred along both horizontal and vertical webs of the tile to the skewback; this is really the crucial point in securing the full strength of the arch.

In many locations upon buildings of irregular form, where beam lines and side walls or girders intersect at acute angles, much difficulty is experienced, and much imperfect work in setting of tile or brickwork of floors may result in the shimming and patching of cut pieces of tiling, for the purpose of filling out the irregular angles and intersections. This is a trouble less experienced in Philadelphia, perhaps, than in any other city, thanks to our checker-board street and block system. This feature, however, does constitute a serious objection to the use of burned clay tiles in certain buildings and in floors of curved form and radial beam plan, and is a point well considered in adopting a form of construction for floors in any new structure.

The terra cotta used principally in all arch construction is of the semi-porous composition of clay, containing a percentage of kaolin, mixed with about sixty per cent. of sawdust and, perhaps, five per cent. of fine coal or coke; this is thoroughly mixed by machinery and carried in batches to the presses, formed by forcing through dies and sorted, dried, and burned, the details of which process should be known to every architect and engineer, as the first step toward a knowledge of fire-proofing methods, but which cannot be dwelt upon at this time. Hollow tiles for interior partition are similarly produced, set as subdivision partitions in all of our modern fire-proof buildings. These blocks will receive and hold rails, much as a piece of wood, and practice has need to avail itself of this feature to a greater extent; in nearly all our more recent so-called fire-proof buildings the use of door studding of wood is all too common and quite uncalled for, since light iron jambs of channel form are quite inexpensive and can be used with as good results for preliminary framing of openings and as plaster grounds, and with less peril to the building, than can wood; within

limits, the lighter form of sheet-metal channel frame—always riveted, not soldered, at the miters—will serve the purpose when exposed to heat better than a heavy rolled channel, and with the nailing of the casing and trim directly to the terra cotta partition blocks, as is perfectly feasible, much of the possible failure of partitions will be eliminated.

There is, perhaps, no fire-proofing process so attractive in its general conception as that by which continuous areas of almost unlimited extent, of any form, shape, or position, can be covered or formed into a surface or wall or partition without break or joint; for is not this what we seek to effect in all construction?

Brick or stone walls, floors, roofs, and columns are at their best only when the joints between the small parts are nearest to elimination. It is a natural production of this prevailing condition that the extensive use of cement concrete for building purposes in connection with modern methods of construction has been so extensively developed during the past decade. Concrete, in itself, being a powerful material under compression, but comparatively weak under tension, it is necessary that in all floor constructions not uniformly and continuously supported a metal bond or tie be used in the lower part of all cement or concrete slabs spanning between supports. Of this form of construction Philadelphia does not afford as many conspicuous examples as might be expected; vast amount of detail and supplementary construction, however, evidence the adaptability of the processes, and numerous tests justify the acceptability of the methods of construction. Woven wire mesh and expanded metal in a majority of cases form the metallic base or tension element of the construction, though examples are not wanting in which rods and twisted bars have been used for tensile members of concrete construction. The immense quantities of water introduced in installing floor systems of concrete constitute the chief objection to its use, on a purely structural view of the subject, necessarily delaying the introduction of floors and finish; but the facility with which forms of varied dimensions and sizes can be executed in this material and with as stable result and as great neatness of finish as work of more regular character, will commend the concrete form of floor and partition work in many cases. Moreover, as a preservative for the embedded steel beams, and the possibility of filling small recesses, cavities, and odd corners, that occur in some forms of construction, particularly about post and girder connections, together with its cementing qualities at union of floor and wall and

floor and partition, make it, the concrete monolithic floor system, a triumph in construction.

The work of placing concrete on bar or rod tension elements must, in all cases, be performed above a wood or other centering, usually supported, with iron hooks from the lower flanges of the supporting beams, with wood forms, inclosing girders, after which the whole is filled from above with the concrete; and being well packed around and above beams and girders and well incorporated with the ironwork, it is allowed to set for some days before removal of the supports and centerings. This work, being uniform and continuous and comparatively without detail, can be executed by comparatively unskilled labor, or workmen in charge of an intelligent and practical foreman, with assurance of satisfactory results.

Only the highest grade Portland cements and anthracite boiler (steam) cinders are used by Philadelphia architects and engineers, with an admixture of fine stone grit or clean bar-sand to fill the smaller voids. The loading for the structure itself is estimated on the basis of 85 pounds per cubic foot for cinder concrete, with additions for the mesh and wood floor, determined by weight, and the final examination by the building department is made by actual loading of promiscuous sections of the floor, never to less extent than 600 pounds per square foot, placed clear of the beams, for office or apartment house or hotel work, and 800 pounds per square foot for warehouse, store, or mill work.

Authoritative tests for strength and fire resistance of cement arch and floor work, made by entirely disinterested and competent parties, seem to indicate that the claims of many proprietors as to the virtues of their respective floor systems are entirely valid, but careful selection of materials and great uniformity of execution and manipulation of materials alone will secure the best results; as heretofore stated, the chief differences and special characteristics of the various systems are in the form of metal tie or mesh used in connection with the concrete. Two forms of concrete and metal partition work are in popular use for subdivision of offices and apartments, the thinner partitions being made solid by filling in between two thicknesses of wire mesh, or expanded metal, wire lashed to vertical angle irons, extending from floor to floor too frequently with wood door studding and base and wainscot blocking, for which there should be a superior means devised of securing these details of finish. Much the larger proportion of fire proofing of partition work in Philadelphia is executed in hollow terra cotta blocks set in cement on the floor system, unfortunately trimmed at

door and sash openings with plowed wood grounds to receive plastering and wood trim.

From actual tests and examination by Philadelphia engineers and architects, the weight of the Roebelling floor system on wire mesh and stiffening bars is found to be slightly over sixty pounds per square foot of floor, not including the supporting beams.

The Merritt system, or expanded metal and concrete, is estimated on the same basis at 67.7 pounds per square foot of floor area.

Plaster-of-Paris or calcined plaster is a well-known non-conductor of heat, and for years much work has been done with mackite blocks for furring of walls, ceilings, and construction of partitions for interior subdivision of buildings; this form of block is simply plaster-of-Paris cast in a mold and having incorporated in its composition spruce shavings or fiber to increase its toughness; and while it can by no means be called a fire-proof material, when placed in an otherwise combustible structure, it has the virtue of affording a solid and therefore non-fire-conducting partition at a very moderate cost and of ample stability for all ordinary subdividing purposes, and will receive and retain plaster without further preparation of the surface.

Recently the company manufacturing the plaster board or mackite block have turned their attention to the manufacture of a cast block and beam-protecting skewback, for fire-proofing purposes, under the name of the Keystone Fire-proofing Block, which is being introduced to some extent in Philadelphia; notably, in the new power-house of the Girard Estate at Third and Chestnut Streets and in the new marine barracks at the League Island Navy-yard, the first-mentioned being complete, the latter in process of installation. There are many attractive features about this form of construction: the sections, being cast, fit with great neatness between the beams; the skewbacks, which combine about 1½ inches of beam protection, are beveled, with a horizontal rebate about two inches mid-depth on the face, to receive the central block cast with a similar bevel on the end and rebated to fit accurately the skewback; after all the blocks are set in place on any floor, the ends of all joints, heads and wall and beam joints, are carefully filled with liquid calcined plaster, thus forming practically one mass. A cement and concrete backing, carrying dovetailed floor strips, 16 inches center to center, is then laid and the whole leveled and finished to receive the wood or tile flooring as may be desired.

In the blocks designed to carry heavy loads a strip of expanded metal

is usually cast in the heart of the block in form of a suspension loop or modified catenary; for lighter work this is omitted.

Like the mackite block, this floor system affords a fine surface upon which a plaster finish can be most economically applied, and very severe tests would seem to indicate the entire sufficiency of the materials for fire resistance.

I have had the pleasure of making a very careful examination of the test house, and the condition of the walls and ceilings, which are constructed of Keystone fire proofing, and have a very reassuring report of

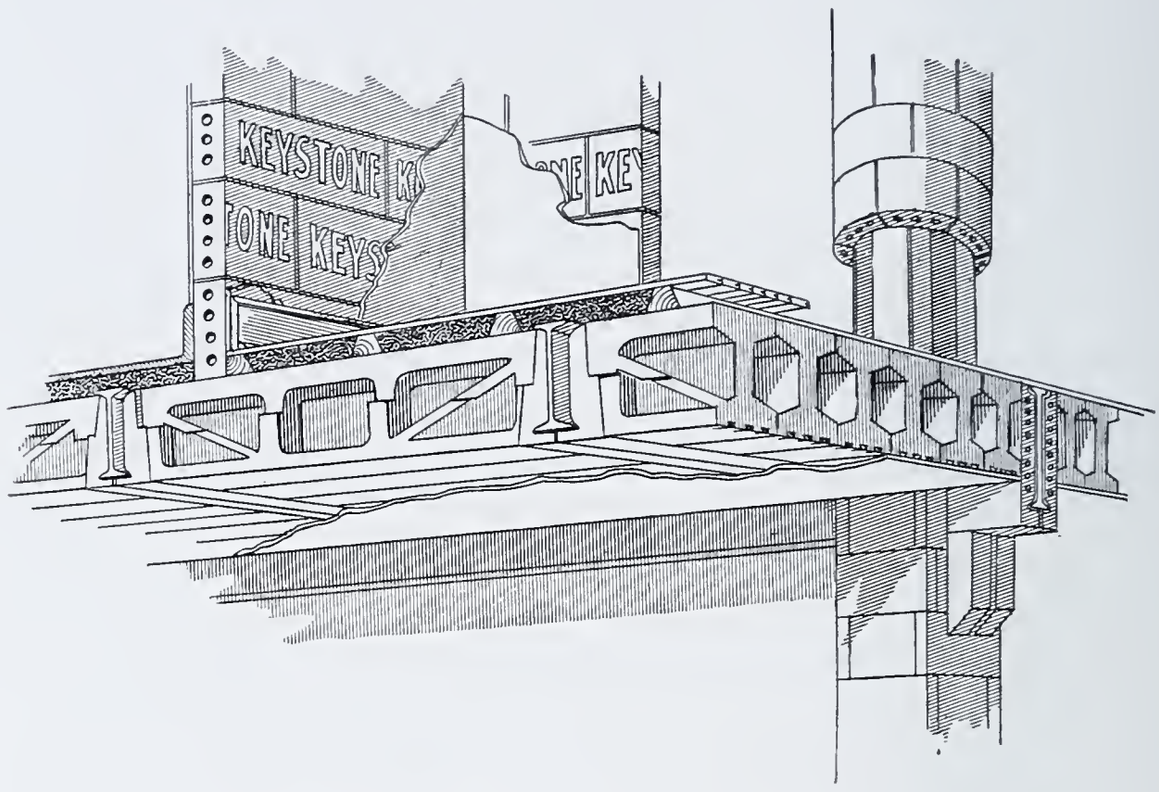

Fig. 4.—Keystone Fire-proof Construction.

the result from the Inspector of the Philadelphia Board of Fire Underwriters.

The method of setting the floor and partitions in form of cast blocks has many advantages, it would seem, over the form of floor construction practised by the Metropolitan Company, which is to cast the whole in place on centering and forms, about the ironwork, of which I am advised Horticultural Hall is the best example existing in Philadelphia.

If time and experience shall demonstrate the amplitude of this form of floor and partition block for both strength and fire resistance in connection with the hose stream under high pressure, then the many advantages of the calcined plaster floor will be appreciated, for it is clean, sanitary, easily installed, and readily adapted to any position and con-

dition; in its production requires little machinery, no burning, and but limited time for drying. It is the lightest form of fire-resisting construction, being determined by actual test with ample concrete backing at from 30 to 40 pounds per square foot of floors, not including the supporting beams, and its cost should be proportionately advantageous. Tests of strength of the blocks taken at random from a number of regular manufacture, of five feet span, ten inches depth of beam, with one and one-half inch fire-protection, in which same were broken at loadings per square foot of floor area ranging from 1393 pounds to 2100 pounds, sufficiently establish the structural value of the floor.

The Vulcanite floor for fire proofing is a combination of a plaster cast shell and beam protection with concrete backing that is being introduced under the Bromley patents and will be better understood from an examination of the illustration; it has as yet had but limited introduction in Philadelphia, but the work done has been of high class, and would seem to be worthy to be classed among the best efforts at fire proofing.

In use of the Metropolitan system of poured plaster, the weight allowance for dead loading is somewhat higher necessarily, on account of length of time required to dry the cast by the slower natural process of atmospheric absorption; this weight, without beams, but including concrete and floor, is estimated from actual test to be 47 pounds per square foot of floor.

In addition to the above typical floor systems, covering the use of terra cotta, concrete, and calcined plaster respectively, the Faucett system of hard tile hollow lintels with cement backing in 15 feet spans of beams at 30 inches center has been found to weigh 58 pounds per square foot of floor area; with beams at same spacing of 20 feet span, the weight is 70 pounds per square foot.

This floor system was introduced in the Lorraine Apartment House and the Stephen Girard Building, and is in use elsewhere in this city.

The Rapp floor system, consisting of a base of common bricks supported on tee irons of heavy sheet metal extending between beams spaced five feet apart, weighs, with contents, 83 pounds to the square foot, and is in use in the Real Estate Trust Building, the "North American" Building, the Albemarle Apartment House, and elsewhere.

One of the most important branches of fire proofing is to be found in the defensive fitting of exterior doors and windows of buildings against communicating or adjacent structures, and in this respect much good work has been done in the use of fire-proof windows and glazings of wire glass.

FIG. 5.—VULCANITE FLOOR FOR FIRE PROOFING.

In stores and warehouses, as well as in many factories, outside metal-covered shutters overlapping walls about the openings afford an excellent protection, and their use has been much stimulated by liberal reductions made by insurance companies on regular rates; but I need not speak of the impracticability of shutters of this kind in offices, tenements, apartment houses, etc., in which they would not be tolerated by tenants, and even if attached would never be closed; this leaves a weak spot in all our larger office buildings and tenement houses. It has to a degree been somewhat mitigated in many pronouncedly exposed locations by the introduction of wire glazed metal frame windows, but objection is made to the fact that this form of glass obstructs vision, though in a corrugated form it does not decrease the lighting of these buildings.

The importance of this feature of fire-proof construction cannot be made too emphatic, and while wire glass is now made perfectly clear, it is an excellent fire retardent, and with development in more perfectly protecting the frames with brick or terra cotta and exposing only the positively essential glass area, with two thicknesses instead of but one of glass, greater efficiency will have been attained.

I am not aware of any important introduction of so-called fire-proof wood; much hope is reposed in the final success and efficiency of the processes, which will lead not to a resort to wood construction, but to a retaining of wood trim and floors, which must always remain a popular finish; the adaptability, non-conductivity, softness, elasticity, and general pleasing effect make it an ideal building material, and with its inflammability removed it will be again restored to an ideal position.

Philadelphia has been phenomenally fortunate in the matter of absence of fire in or adjoining her fire-proofed structures; there are no lack of conditions in every respect similar to the well-known conditions surrounding the Home Life Insurance Building in New York.

There are office buildings exposed to most inflammable structures, which with a fair start and favorable atmospheric conditions would penetrate and destroy the contents, if not ruin, the more invulnerable structure; there are hotels that would be little more than a flue for the consumption of the weaker neighbor, and other in many respects excellent and modern structures so situated with regard to common construction that the latter would be but the signal for the positive annihilation of the interior of the former; and yet, barring a few incipient fires in the kitchen of one of our prominent apartment houses, which,

thanks to fire-proof conditions, made no headway, escape has thus far been the good fortune.

The most severe fire in a modern office building in Philadelphia, according to record, did occur on July 18, 1885, in the New York Mutual Life Building, resulting in a loss of $2000 in damage to the building and $15,000 to the contents. It was caused by an electric light wire to apartments occupied by telegraph operating room in the fifth floor; some beams were warped, and were removed with the floor and plastering; but the apartments adjoining and below were practically undamaged.

The Bourse and Fidelity Building have both had fires which destroyed the contents and trim of apartments without extending beyond.

These cases serve to give great encouragement; as architects and engineers, we need to grasp the situation seriously, taking inspiration from past achievements, but, guarding every tempting retrogression, take every advantage possible to improve future conditions; prevention at all times is infinitely better than cure, and while I have done little more than touch the verge of a vast and important subject in which every person has a vital interest, if I have succeeded in directing attention and interest toward the possible saving of a life or loss of property from the dire consequences of a conflagration, I trust for your patience and indulgence you will feel abundantly rewarded.

DISCUSSION.

Wm. Copeland Furber.—The experiments of James E. Howard ("Iron Age," April 10, 1890, Kent's "Engineer's Pocket-book," p. 382) indicate that steel has its maximum strength at about 400° F. When the temperature is raised above this point, the strength decreases at a rate approximating 10,000 pounds per 100 degrees of heat. This fact teaches us that in order to preserve the integrity of the structure, the temperature of the metal work must not be allowed to greatly exceed 400° F.

The method commonly employed to protect metal work is to cover it with a non-conducting covering, or, rather, with a covering which is a poor heat conductor, for all substances conduct heat to a greater or lesser degree. The substance used as a covering should not only be a poor conductor of heat, but be capable of resisting disintegration when it is subjected to rapid changes of temperature, which may be caused by the application of water when it is in a highly heated condition.

A material which fulfils this condition to a remarkable degree is known as semi-porous terra cotta. This material is composed of fire-clay, made porous by the admixture of sawdust with the clay, while it is in a plastic state. Upon firing in the kilns the sawdust is consumed, leaving the burnt clay in a porous

condition. This semi-porous terra cotta can be heated to redness, and can then be plunged into water without any apparent disintegration.

Fire-clay is probably the most durable substance which can be applied to the protection of iron-work for protection against heat. The knowledge of its virtues, however, has led designers and manufacturers to decrease the thickness of the covering in many places to a point where it no longer answers the purpose in a satisfactory manner. In buildings a covering of 1 inch is all that protects the lower flanges of the floor beams, and this is not at all sufficient. The part of the tile which covers the flanges is without air cells, because there is not sufficient thickness to get them in.

Since the substitution of iron-work for brickwork in the structural parts of buildings, the tendency has been to restrict the space occupied by the iron-work to a minimum, and this has resulted in begrudging the every additional inch required for the fire-proof covering, and as a consequence the fire proofing is no longer of sufficient thickness to fully insure that the iron-work will be properly protected in event of great heat. There is but one remedy for this, and that is to increase the thickness of the covering at the vulnerable points. The same criticism may be made of Portland cement coverings; a covering cannot be effective unless it has thickness and air spaces, and it is misleading to talk of fire-proof buildings when the fire proofing is but 1 inch thick at a vital point.

EXPANDED METAL IN FIRE-PROOF CONSTRUCTION.

JAMES S. MERRITT.

Read May 18, 1901.

Expanded metal has come into such general use, and is so widely known to-day, that it is scarcely necessary to describe its appearance or general characteristics, but it may be interesting to trace its origin and to describe briefly the manner in which it is made, before taking up the subject of its use in fire-proof construction.

About fifteen years ago Mr. John F. Golding was the editor of a trade journal in the city of Chicago. The price of wire was very high at that time, and it occurred to Mr. Golding that a material could be made for fences by slitting and subsequently opening out a sheet of steel to form meshwork. Sheets of the right kind were expensive and difficult to obtain at that time, and Mr. Golding encountered the trials and troubles which seem invariably to beset the path of the inventor. Persistent effort and the expenditure of many thousand dollars finally resulted in success, although the process adopted was not that which he at first contemplated, inasmuch as the shearing and opening up of the meshes was accomplished in a single operation. In his application for a United States patent Mr. Golding called the material "slashed metallic screening," showing the use which he had in mind, but, as often happens, expanded metal is adapted to uses of which the inventor never dreamt, and it is probable that the fire proofing of buildings takes fully ninety-nine per cent. of the present output, although millions of square feet of it are used annually for fencing, window screens, elevator enclosures, clothes lockers, etc. The development of the business has been very rapid, and there are, at the present time, four companies in the United States and five or six in Europe engaged in the manufacture of expanded metal. There are also a number of local companies doing fire-proof construction, and there is probably upward of $10,000,000 invested in the various expanded metal industries. This figure is small when compared to concerns like the United States Steel Corporation and some others, but is of respectable size when it is considered that the

business has grown from nothing, and that a market has been created for the material in the course of about ten years.

Expanded metal is cut from a sheet of open-hearth steel, expanded or opened into a netting of any desired size of mesh or section of strand. The operations of shearing the steel and opening the meshes are simultaneous, and are performed cold. No material is wasted, as there are no pieces cut out. The finished sheets are from three to eight times as large as the original sheets of steel, the increase depending upon the size of the meshes and the width of the strands.

The grades of expanded metal which are in commercial use to-day vary from $\frac{3}{8}$-inch mesh, cut from No. 27 B. W. G. steel, to a diamond

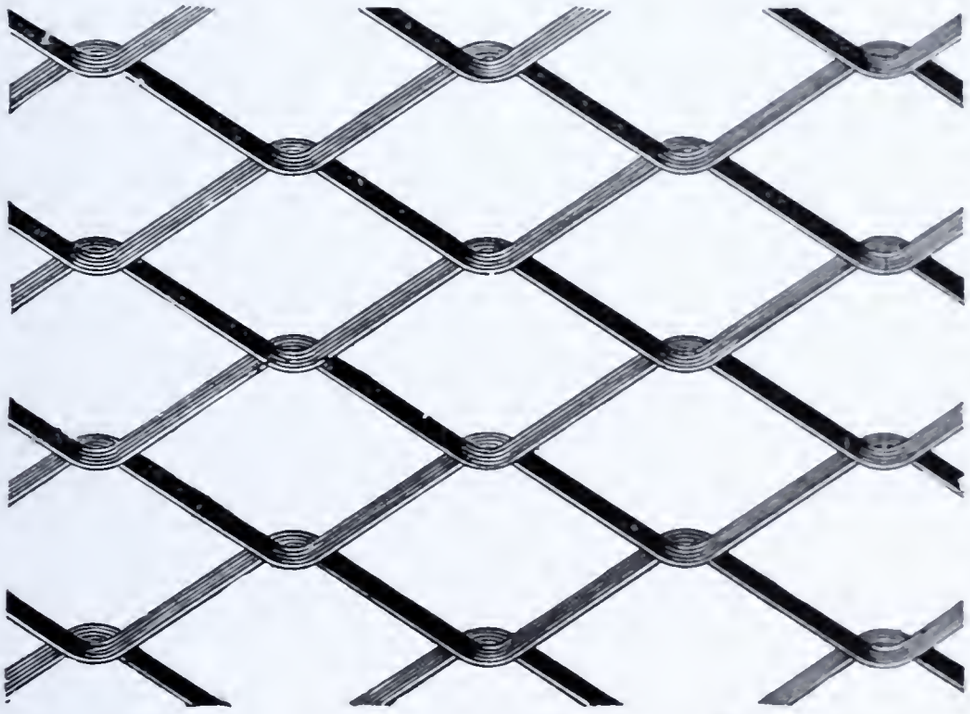

Fig. 1.—Four-inch Mesh Expanded Metal.

mesh 5×12 inches, cut from No. 4 gage steel. The sheets are usually 8 feet in length, and the machines which do the cutting have to be slightly more than this in the clear between the housings. They are very heavily and substantially built, as it is necessary that they should run with smoothness and accuracy, for the shear blades have to be adjusted with great care to make a clean cut.

The original method of cutting expanded metal did not involve any stretching of fibers of the steel. The sheet passed through the machine in a diagonal direction. The first stroke of the shear blades cut one mesh and pushed it down at right angles to the plane of the sheet of steel. The second stroke of the blades produced, in a similar manner, the next three meshes, while the third stroke produced five meshes.

The distance between the housings of the machine limited not only the length of the sheet, but also the breadth, and most of the old machines were unable to produce a sheet more than 8 feet in length by 4 feet in breadth. The sheets of expanded metal were never quite square, and the thickness of the steel which could be worked in this way was limited. Before placing the sheets of steel in the machine it was necessary to cut them to the exact size to give the desired sheets of expanded metal.

In 1894 Mr. Golding invented and patented another method of cutting expanded metal, and this has proved far superior to his former invention, and of wider range. The sheets of steel now enter the machine in the direction of its shorter axis instead of diagonally, as in the old method. The shear blades, instead of being each set diagonally and in a different plane, now consist of a stationary straight lower blade and a series of diamond-shaped blades, in one vertical plane, carried by the movable upper head of the machine. The distance between the points of adjacent blades determines the length of the greater axis of the meshes, while the shape of the blades and the stroke of the machine determine the width of the meshes. In changing the machine from one mesh to another, it is not necessary to change the lower blade, but merely to change the upper blades.

We will suppose that it is desired to cut 3-inch $\times$ 6-inch mesh from a sheet of No. 10 steel. Expanded metal above No. 14 gage is usually cut with an approximately square strand, or, in other words, the width of the strand is about equal to the gage of the steel. The sheet of steel is placed in the machine with its edge projecting at the back $\frac{1}{8}$ inch beyond the lower shear blade. The machine is started, and the movable head which carries the set of diamond-shaped shear blades comes down upon the sheet. The points of the row of upper blades, some sixteen in number, strike the top of the sheet of steel, and begin to shear it away from the rest of the plate, and at the same time to push downward in a vertical direction the strand so formed. The steel must be of the proper quality, as the elongation amounts to over 10 per cent., the corresponding reduction being greater in the thickness than in the width of the strand in about the ratio of 1.16 to 1.00. The upper knives are stopped in their downward movement just before they have traveled far enough to completely sever the strand from the original sheet. The strand is left connected with the sheet by a strip of solid steel, which is technically known as "the bridge." The head is then raised and the plate is shifted laterally a distance equal to one-half the long axis of the mesh which is being cut. It is then fed the width of one strand beyond the

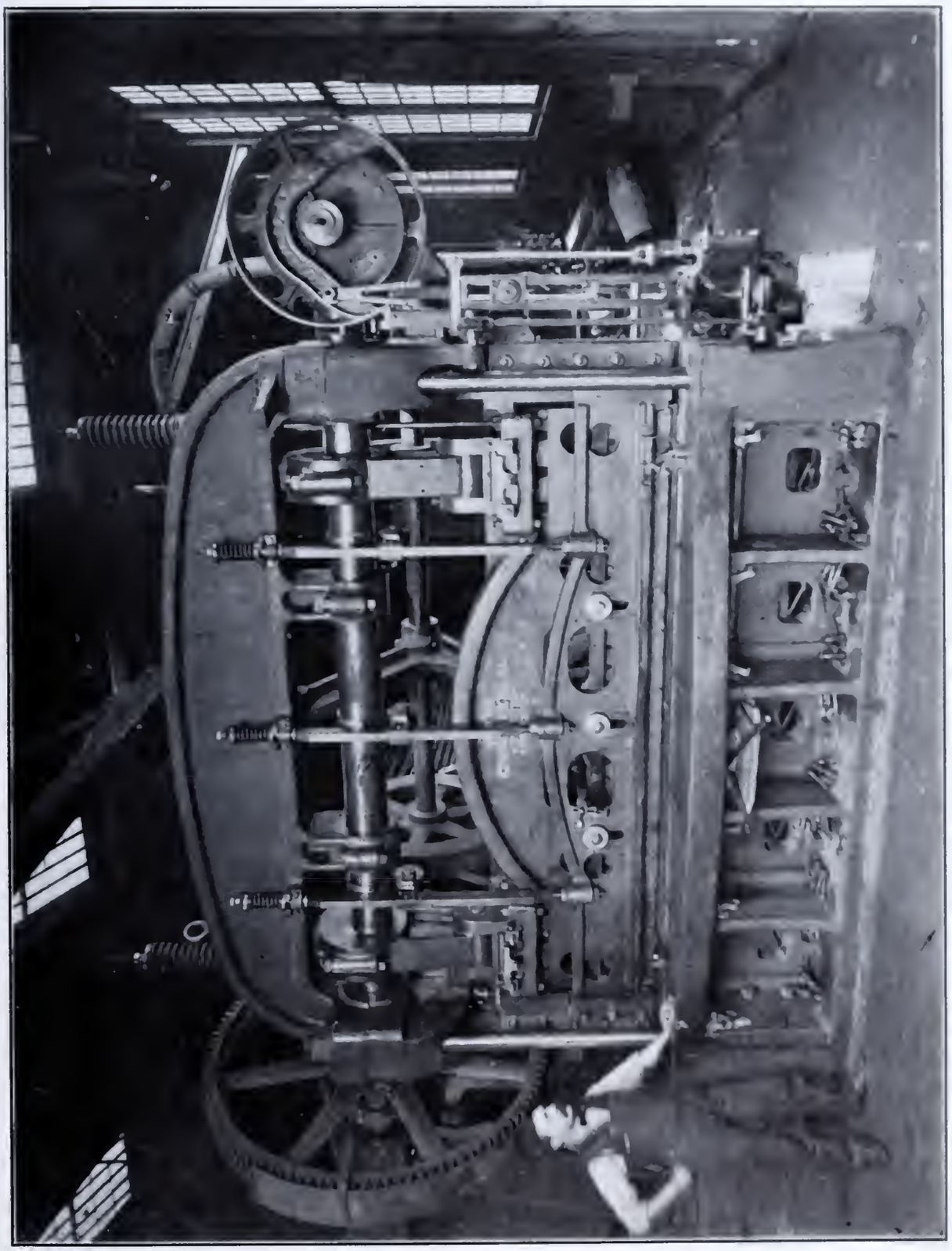

FIG. 2.—MACHINE FOR CUTTING EXPANDED METAL.

edge of the lower plate, and the machine is ready for a second stroke. When the head descends, the points of the upper blades strike upon the bridge, and begin the shearing process at that point.

After a sufficient number of strokes to form a sheet of expanded metal of the desired width, the feed of the sheet of steel in a horizontal direction is intermitted during one stroke of the head. The upper blades cut through the "bridge" on the same line as the shearing done during the preceding stroke, and as a result the expanded metal is entirely separated from the solid sheet of stock.

When expanded metal is made by this improved process, the sheets are exactly square, and the width of the sheet is only limited by the width of the original sheet of steel, or by the possibility of removing the sheets of expanded metal, which issue vertically downward from the back of the machine. It has been customary to build a pit behind the machine, to get the necessary room, and it is not possible, at the present time, to turn out sheets of more than about 8 feet in width by 9 feet in length, the latter dimension being limited by the distance between the housings of the machine. It is evident that a machine could be arranged, should occasion demand, to cut a 48-inch wide sheet of No. 10 steel into a single sheet of 3-inch mesh expanded metal about 32 feet in width.

Before cutting, the sheets are annealed and then pickled to free them from scale. After cutting, the expanded metal is annealed a second time to remove internal strains or crystallization which may have occurred. The product is also put through a number of minor processes which do not possess any special interest, but are necessary for the proper operation of the machines and to obtain a uniform product.

Few persons are aware of the extent to which expanded metal is used to-day. As an illustration of this, suffice it to say that more than 9,000,000 square feet, or 200 acres, of expanded metal were used in the construction of the buildings of the Paris Exposition of 1900. This area is greater than that bounded by Market and Sansom Streets, the Delaware and Schuylkill Rivers.

It should be borne in mind that there is really no material known which is absolutely "fire proof." In the opinion of the writer, "fire-resisting" is a better term, and the reasonableness of it is evident when we consider that the protection of an office building or an apartment house, in which most of the rooms contain but little combustible material, presents a very different problem from the case of a warehouse or manufactory, in which the floor-space is not divided at all, and in which

large quantities of inflammable material may be stored occasionally or continually. It is necessary in each case to "resist" the fire until it has burnt itself out or has been extinguished.

There are two general classes of expanded metal, and each of these has its own special use: Small mesh, cut from light steel, is used as a basis for plastering. Large mesh, cut from heavy steel, is used in connection with concrete for floors, roofs, etc., where a load has to be carried.

In the early days of expanded metal a lathing was made and was offered to the architects as a substitute for wood lath. Numerous tests, some of them arranged, and others of an involuntary character, soon demonstrated the fact that wood studding or wood joists covered with the expanded metal, and the latter thoroughly plastered, would resist a hot fire for twenty or thirty minutes, and thus afford an opportunity to extinguish the fire. It took hard work to persuade architects and their clients that it was worth while to spend a little money over and above the cost of the ordinary wood construction, and no one who has not been brought in contact with this particular subject can have any idea of the great change in public opinion which has come about in the last fifteen years.

Until the year 1892 partitions were constructed by securing sheets of expanded metal to each side of wood or steel studs, and then plastering the former. About the year named it occurred to Mr. Golding that a better partition could be made by the use of a single surface of lath, carried upon light steel members, which could be entirely embedded in the plaster, thus doing away with an air-space, which was rather a disadvantage than an advantage. The result is the present so-called "solid partition," 1½ or 2 inches thick, which has proved itself equal in every respect to the old-style partition, while at the same time cheaper, and possessing many advantages which the other did not.

Steel studs—usually ¾-inch × ⅝-inch channel section—are set at distances of 16 inches, and expanded metal lath is then laced by wire to one side of the studs. The lath is plastered on the front, and a second coat of mortar is applied as soon as the first has "set," the second coat being upon the "keys," which are formed by the passage of the first coat of plaster through the meshes of the lath. Sufficient further coats of plaster are added, and any desired finish can easily be obtained. The partitions offer great resistance to the passage of sound, and numerous attempts have been made to explain this property, the most reasonable explanation, in the opinion of the writer, being that vibrations entering

one side are intercepted by the network of steel, and are carried off laterally to the other parts of the structure, instead of passing directly through the partition. In all cases of fire these partitions have acquitted themselves remarkably well, and it is quite likely that some of those present recollect the fire at the Merion Cricket Club a few years ago, where these partitions were practically uninjured, although the upper part of the building was entirely destroyed.

The fire proofing of columns, girders, etc., is done in much the same way as the partitions. Expanded metal lath is secured to light steel members, formed in appropriate shapes, and secured to the structural steel. The lath is thoroughly plastered, and in positions which are more than ordinarily exposed a second layer of expanded metal and plaster is sometimes placed outside the first, with a small air-space between. The plaster is so thoroughly "keyed" or clinched on the back of the lath that it is a very difficult matter to get it off.

Expanded metal lath on wood studding, as well as the "solid partition," has long been used for the exterior construction of buildings. Not only dwelling-houses, but large manufacturing buildings, have been constructed in this way, and the practice is increasing rapidly, as the cost is less than that of brick walls, and the load on foundations much less.

The next step in the development of expanded metal construction resulted from an experiment by Mr. Golding, about the year 1892, of embedding heavy expanded metal in a concrete plate for floor construction. The principle involved is that which was first exploited by Jean Monier, in France, at the time of the Paris Exposition of 1878, and he is generally given credit for the invention, although the advantages of combining iron with concrete were well known before his time.

In the expanded metal system of floor construction a temporary "centering" of plank is first put in place. The sheets of expanded metal are laid on the centering with their sides overlapping one mesh. The concrete—usually consisting of Portland cement, sand, and clean boiler cinders, in the proportion of 1, 2, 6,—is thrown on the expanded metal, and leveled to the proper thickness. Thorough mixing of the concrete, by machinery if possible, and thorough ramming of the concrete in place are always insisted upon, and much of the success of expanded metal construction is due to these precautions.

In using expanded metal in connection with concrete, it is necessary to supply sufficient steel at all points where it is possible for the structure to come in tension. In a floor the most economical position for

the steel is, of course, as near as possible to the lower surface of the concrete, where its "moment of resistance" is greatest.

The peculiar construction of expanded metal secures this automatically, for a sheet of it, when laid upon the centering, touches the latter at only one point in each mesh. The concrete passes around and beneath the strands of steel, thoroughly surrounding the latter, so that it is scarcely visible when the centering is removed.

It is, of course, equally necessary to provide sufficient concrete above the "neutral axis" to resist the compressive stresses, and it is possible to design, with great accuracy, a combination to suit any specified load and span. Numerous tests have been made, and many of these appear, at first sight, quite marvelous, but can be explained upon the ground that the expanded metal and concrete structure tested should not be considered as a beam, supported at each end, but as a rectangular plate, supported or fixed on all four sides, which is a very different problem.

This brings out another point, in which expanded metal has the advantage over rods in any form. The latter act in one direction only, and have no effect in tying the concrete together laterally, while the expanded metal does this to a marked degree.

The most elaborate series of tests ever made upon the fire-resisting properties of concretes, brick, tile, etc., is probably that by the Commission of Hamburg, Germany, an abstract of which will be found in Johnson's "Materials of Construction." These tests showed the superiority of cinder concrete, and a number of tests and actual fires in this country during the last few years have demonstrated the same thing.

The durability of any form of construction is always a serious question with the architect or engineer. No one questions the concrete, but what can be said for steel embedded in concrete? A few years ago there was a general discussion of this point in the columns of the engineering journals, and it was finally settled to the satisfaction of almost every one that concrete is the best preservative of steel known, and there has since been a general movement toward the protection of steel from rust by the use of concrete, even when there is no necessity for protection against fire. A consideration of this subject would be likely to lead to a discussion of the use of expanded metal in tanks, bridges, foundations, conduits, etc., which is rapidly increasing, but which does not properly come within the limits of the subject assigned for this evening.

ABSTRACT OF MINUTES OF THE CLUB.

Business Meeting, April 6, 1901.—The President in the Chair. Sixty-five members and eight visitors present.

The death of S. R. Stubbs, active member, was announced.

Mr. Henry G. Morris presented a paper upon "The Parker Steam Generator," which was illustrated with lantern reproductions. He was followed by Mr. J. Parker, the inventor, who read a paper "On the Science of Steam-making."

Dr. A. E. Kennelly gave an informal lecture upon "Submarine Electric Cables," profusely illustrated.

The Tellers reported the election of Messrs. Thos. Welcome Clark, Chas. Dunn, Geo. W. Hancock, Leonard C. Holston, H. W. Huntzinger, Harry W. Jayne, and Thos. McE. Vickers to active membership, and Mr. Henry F. Dirks to junior membership.

Regular Meeting, April 20, 1901.—The President in the Chair. Forty-three members and eleven visitors present.

The death of Wm. M. Levering, active member, was announced.

A communication was presented from the Engineers' Society of Western New York, inviting members of the Club to make use of its rooms and facilities in the city of Buffalo during the Pan-American Exposition.

Mr. I. Wendell Hubbard presented some "Notes on the Construction of a Factory Chimney," followed by Mr. Francis Schumann with a paper upon the "Design and Construction of Factory Chimneys." A general discussion upon the subject of chimneys and the production of draught was participated in by Messrs. D. D. Elder, R. W. Polk, Frank Sweeney, John C. Trautwine, Jr., James Christie, and Henry I. Snell.

Regular Meeting, May 4, 1901.—The President in the Chair. Sixty-five members and seven visitors present.

The President called attention to the new method of illuminating the meeting-room, first used on this date.

Announcement was made of the election to honorary membership of Messrs. William Price Craighill, Charles Town, W. Va.; John Fritz, Bethlehem, Pa.; Chas. Haynes Haswell, New York; Benjamin F. Isherwood, New York; George W. Melville, Washington, D. C.; and Wm. Hasell Wilson, Philadelphia.

Mr. Harrison Souder presented some notes on the "Design and Maintenance of Highway Bridges, and Pile Driving." His remarks were illustrated by drawings and photographic views of the work projected by the electric lantern. The subject was discussed by Messrs. Edwin F. Smith, Edgar Marburg, Carl Hering, Benjamin Franklin, Richard G. Develin, Charles Hewitt, Thomas G. Janvier, and others.

Mr. John Birkinbine sent a written discussion in which he called attention to the unwise policy of city councils of Philadelphia in appropriating for the present year less than one-tenth per cent. of the value of the 300 bridges in the city, for the purpose of their maintenance.

Regular Meeting, May 18, 1901.—The President in the Chair. Fifty-two members and ten visitors present.

Mr. Edwin F. Bertolett read a paper upon "Fire-proof Construction in Philadelphia," and illustrated his remarks with a large series of views.

Mr. James S. Merritt presented a paper upon "The Use of Expanded Metal in Fire-proof Construction," profusely illustrated.

Business Meeting, June 1, 1901.—The President in the Chair. Seventy-four members and ten visitors present.

Mr. C. M. Mills invited the members to inspect the new Grays Ferry Bridge on Saturday, June 8th.

The Tellers reported the election of Mr. Robert Schmitz to active membership and Mr. Chas. H. Machen to junior membership.

A topical discussion was participated in by Messrs. Edgar Marburg, James Christie, L. Y. Schermerhorn, and John C. Trautwine, Jr., on "The Duty of the Engineer," followed by remarks from Messrs. Christie, Birkinbine, Falkenau, Holcombe, and Livingston.

ABSTRACT OF MINUTES OF THE BOARD OF DIRECTORS.

Regular Meeting, April 20, 1901.—Present: The President, Vice-President Schermerhorn, Directors Christie, Hewitt, Comfort, Levis, Riegner, and the Secretary (Vice-President Smith was also present before adjournment).

The Treasurer's report showed:

Balance, February 28th,	$2532.62
March receipts,	246.10
	$2778.72
March disbursements,	162.60
Balance, March 31, 1901,	$2616.12

Upon motion the House Committee was authorized to have twenty electric lamps installed in the meeting-room.

Special Meeting, May 4, 1901.—Present: The President, Vice-Presidents Schermerhorn and Smith, Directors Hewitt, Comfort, and Riegner, and the Secretary.

The Secretary read the ballots which were cast by every member of the Board of Directors in favor of the election of the nominees for honorary membership, and in accordance therewith the President declared Messrs. Wm. Price Craighill, John Fritz, Chas. Haynes Haswell, Benj. F. Isherwood, Geo. W. Melville, and Wm. Hasell Wilson elected to honorary membership in the Club.

Regular Meeting, May 18, 1901.—Present: The President, Vice-President Smith, Directors Christie, Comfort, and Riegner, and the Secretary.

The Treasurer's report showed:

Balance, March 31st,	$2616.12
April receipts,	707.05
	$3323.17
April disbursements,	698.04
Balance, April 30, 1901,	$2625.13

Upon motion the Board ordered that on June 1st there should be a business meeting of the Club for election of members, and that members elected at that time should be charged only one-half year's dues to December 31, 1901.

The House Committee presented an appraisement of the furniture and equipment of the Club in its house on May 1, 1901.

The Secretary was requested to have a new Directory published in the same style as heretofore.

Special Meeting, June 7, 1901.—Present: The President, Vice-Presidents Schermerhorn and Smith, Directors Comfort and Riegner, and the Secretary.

The Treasurer's report showed:

Balance, April 30th,	$2625.13
May receipts,	170.10
	$2795.23
May disbursements,	601.00
Balance, May 31, 1901,	$2194.23

The Library and Publication Committees recommended that the prices of Proceedings, for single numbers, be made for libraries and newsdealers 35 cents, and for all others (except members), single numbers 60 cents; all other prices remain as heretofore.

ADDITIONS TO GENERAL LIBRARY.

From Chief of Engineers, War Department, Washington, D. C.
Report 1900, Parts 7 and 8.

From United States Geological Survey.
Water Supply and Irrigation, Papers No. 43.

From United States Coast and Geodetic Survey.
Annual Report of Superintendent, 1899.

From L'Association Technique Maritime, Paris, France.
List of Members, 1901.

From Fairmount Park Art Association.
Twenty-ninth Annual Report, Board of Trustees, and List of Members.

From University of California, Berkeley, Cal.
Geology of Central Portion of Isthmus of Panama.

From the Engineers' Club of New York.
1901 List of Members.

From Brooklyn Engineers' Club.
Proceedings for 1900, Vol. IV.

From Wm. Ford Stanley, London, England.
Surveying and Levelling Instruments, 1901.
Mathematical Drawing and Measuring Instruments, 1900.

From Societe des Ingenieurs Civils de France.
Annuaire de 1901.

From Regio Museo Industriale Italiano, Torino, Italy
Annuario per L'Anno Scolastico, 1900–01.

From Metropolitan Water Board, Boston, Mass.
Sixth Annual Report.

From Theodore Cooper, Esq., New York.
General Specifications for Steel Railroad Bridges and Viaducts, 1901.

From University of Illinois.
Technograph, No. 15, 1900–01.

From W. S. Blatchley, Indianapolis, Ind.
Indiana Department of Geology, Report, 1900.

From J. C. Branner, Stanford University, Cal.
Annual Report, Arkansas Geological Survey, 1892, with Atlas.

From City Parks Association of Philadelphia.
Thirteenth Annual Report, 1901.

ERRATA, VOL. XVIII, NO. 3.

CHIMNEY CONSTRUCTION.

PAGE 164:

Eighth line from top read $w = \frac{x\,m}{A\,h}$ instead of $\frac{X\,m}{A\,h}$.

Seventh line from bottom read (II) instead of (I) } Or interchange Figs. I
Fifth line from bottom read (I) instead of (II) } and II, page 165.

Fourth line from bottom read $x > k$ instead of $x < k$.

Second line from bottom read $p \quad \frac{m\,x}{I}\,d = \frac{m\,d}{a\,y}$; instead of $p = \frac{m\,x}{I}$; $d = \frac{m\,d}{a\,y}$;

PAGE 166:

Tenth line from top read $\frac{\pi\,h}{3}\left(\frac{D^2+D\,d+d^2}{4}\right)$; instead of $\frac{\pi\,h}{3}\left(\frac{D+D\,d+d^2}{4}\right)$;

PAGE 168:

Twelfth line from top read were instead of where

Sixth line from bottom read lever instead of level.

Editors of other technical journals are invited to reprint articles from this journal, provided due credit be given the PROCEEDINGS.

PROCEEDINGS

OF

THE ENGINEERS' CLUB

OF PHILADELPHIA.

ORGANIZED DECEMBER 17, 1877. INCORPORATED JUNE 9, 1892.

NOTE.—The Club, as a body, is not responsible for the statements and opinions advanced in its publications.

Vol. XVIII. OCTOBER, 1901. No. 4.

THE DUTY OF THE ENGINEER.

A Topical Discussion, June 1, 1901.

THE DUTY OF THE ENGINEER TO HIMSELF AND HIS PROFESSION.

EDGAR MARBURG.

THE discussion this evening is intended, I understand, to develop a somewhat informal expression of opinion on the duties of the engineer in his several professional relations. I have been asked to say a few words on his duty to himself and to his profession. A moment's consideration will show that the two are indeed inseparable. There is nothing an engineer can do in furthering the interests of his profession by which he, himself, does not become the chief gainer. The contrary is no less true. He who is remiss in discharging his duties to his profession to the measure of his ability fails to a like extent in promoting his own interests. This is, indeed, but another way of saying that every successful effort in doing something by which the profession profits adds to the professional capital of the doer, and hence redounds directly to his personal advantage. There was a time in the earlier days of engineering when its few followers had to rely upon their private note-books, containing the accumulated store of their professional knowledge, as their chief source of information. And it was natural that data gathered by the slow, laborious process

of personal experience, when other means were almost wholly lacking, should have been more or less jealously guarded. In those days engineering societies had no existence, or next to none, and engineering literature was of the crudest kind. Just as every trade and every business had its "secrets," engineering had its mysteries. To-day such "secrets" are seldom kept, not because men have grown more altruistic, but chiefly because they recognize that it does not pay to keep them. The accumulation and diffusion of knowledge along all lines is now proceeding at such a tremendous rate that the greatest possible contribution on the part of any single individual sinks into comparative insignificance. The gain that may accrue to him by selfishly withholding the results of his personal experience and observation is apt to be as nothing compared with the professional prestige he may derive from their publication through the widest channels. It is true that there are not wanting men to-day in our profession, as in every other, who, like the sponge, absorb what comes within their narrow reach and yield it only upon pressure. Happily such men constitute an insignificant minority. Nor can there be a doubt that they are themselves the chief sufferers of their narrow-mindedness. We can all bear ready testimony to the cheerful willingness with which engineers in general are wont to place the results of their experience at the free disposal of their colleagues, both on private and public occasions. By some this policy is carried so far that they refrain from patenting devices that show good possibilities of profitable development. While no one can reasonably condemn him who seeks to reap the largest legitimate returns from ideas that are his own, we can not refrain from applauding the high-mindedness that prompts a contrary course. And such examples are by no means so infrequent that they must be classed as rare exceptions.

Coming now to the direct question before us,—the duties of the engineer to himself and his profession,—which, as I have said, are really one and the same, the answer can be put, I think, in very few words. His duty is to hold high professional ideals and to make a conscious and conscientious effort to apply them to himself, as nearly as may be, in all his professional relations. To consider in any great detail just what these ideals should be and how they are to be observed under various contingencies, would be equivalent to formulating a code of professional ethics. To attempt even an outline of such a code would be alike presumptuous and unprofitable. Since engineers are human, they may be broadly classified, ethically, under two

headings. First, that overwhelming majority who would not stoop to unprofessional practices, under any consideration; and, second, that small but ever-present minority who strive persistently for momentary advantage without a nice regard to the means by which it is to be attained, or for the rights of others. Men whose moral sense is so warped will never be redeemed by any artificial code that may be prescribed for their professional guidance. Their natural tendencies may perhaps be somewhat curbed, or at least their influence for evil partly negatived, by giving the widest publicity to their practices whenever they assume a form that plainly warrants public exposure. Our leading engineering journals have not hesitated, in extreme instances, to assume this duty.

It has been recommended from time to time that the engineering societies should exercise a sharp restraint upon unprofessional conduct through their power of expulsion. Experience has shown, however, that this power is rarely or never brought into play; not only because the chief offenders are apt to be beyond their pale of membership; but because it is human nature for men to condemn silently rather than accuse openly. Moreover, the right of forcible deprivation of membership is wisely so hemmed in by restrictions that it is not easily made operative. Between the two extremes, this condition is clearly preferable to one by which the professional character of the members might be lightly exposed to indiscriminate assault inspired perhaps by individual caprice, jealousy, or prejudice. It is well, too, to remind ourselves that a wide charity should mark our judgment of an apparently unprofessional act on the part of another. While the deed itself may seem clearly revealed, there are often contributing and palliating circumstances that are unknown and unknowable.

And after all, may we not rest confident in the belief that there is no calling in which the average standard of professional conduct is more wholesome than in our own, and none more free from arrant quackery? It is, of course, not pretended that engineers are naturally of a superior moral fiber; but their training and, in fact, their every duty require an accuracy of thought, and honesty of reasoning, that make for truth. Moreover, the work of the engineer from the humblest to the highest is apt to come under the direct scrutiny of his peers, by whom its merits or faults are easily discerned, and upon whom his preferment is often directly or indirectly dependent. Thus it comes that success in engineering is, generally speaking, in proportion to real desert. Pronounced exceptions to this rule are comparatively

uncommon. Unlike the physician, the engineer can not conceal downright incompetency behind an agreeable personality, nor can he count on burying his mistakes. Some years ago there appeared in one of our foremost magazines * two papers, in which the question, "Can lawyers be honest?" was ably presented from opposite points of view. While I would yield to none in my tribute of respect to the legal profession in its best estate, it is a comforting thought that in our own profession the very suggestion of such a heading, much less a serious argument upon the question, were inconceivable. In claiming this, we need not withhold the admission that the engineer has probably less temptation to depart from normal, every-day standards of rectitude than has his brother of the law. Nor does he need to defend his practices by professional traditions not always easily reconcilable with such plain standards.

At the coming annual convention of one of our national engineering societies a discussion is to be held on the question whether the interests of the profession and the duties of its members to the public demand that candidates for admission to the practice of engineering should be required to give some formal evidence of their competency. At first it might seem that there could be but one answer, and that in the affirmative. A little reflection will show, however, that there is much to be said on the other side. The conditions in our profession are peculiar in that they offer opportunities of employment through innumerable channels to men who need possess only the merest smattering of theoretic knowledge. While this imposes pretty definite limitations to their ultimate advancement, they may be competent to perform such minor duties as are entrusted to them in a wholly satisfactory manner. Yet men of that type would doubtless be excluded by any examination worthy of the name. To me such a course would appear unjustifiably harsh. Not only would it work a hardship to the individuals immediately concerned, but also to their employers. In fact, there would seem to be no reasonable warrant for subjecting engineers in general, who are employed on a salary, to tests other than those naturally imposed by the requirements of their service. The employer, whether individual or corporation, may well be trusted to determine the question of their fitness to his entire satisfaction.

When we come to consider the relatively small number of engineers

---

* "The North American Review," vol. CLII, 1891, pp. 194 and 504.

in independent practice, there is more ground for reasonable differences of opinion. Whatever tests of competency may be applied, however, it would seem that they should rather take the form of a searching inquiry into the professional record of the candidate than an examination. While it is easy to set an examination that will exclude incompetent men, it is exceedingly difficult to prevent the exclusion of men who are really competent. The tendency of an examination is almost unavoidably to set a premium on memory rather than general intellectual fitness; on so-called book-learning rather than on practical experience and plain common sense.

Let us turn aside a little further to consider for a moment an interesting matter, not strictly germane to the subject. The question is not infrequently asked, Why does the profession of engineering not receive the same measure of recognition by the general public that is so freely accorded to the so-called learned professions: theology, medicine, and law?

While public sentiment is doubtless growing more enlightened, one is still often amazed at the vague notions betrayed by men of good average information concerning the functions of the engineer. Even at this day a civil engineer is not uncommonly looked upon as a surveyor who occasionally turns his hand to other duties. A college graduate, speaking of civil engineering, once said to me with blunt frankness, that the prospect of spending one's life looking through the small end of a telescope seemed to him singularly unattractive. I replied that I thought all men who regarded engineering in that light would doubtless share his feelings.

The mechanical engineer is scarcely better off. The average intelligent layman looks upon him as some kind of a cross between an inventor, a machinist, and a stationary engineer; but is sorely puzzled to identify him more closely. As for the electrical engineer, he is popularly regarded as an inventor, pure and simple, whose talents may sometimes elevate him to the so-called "wizard" class.

Quite recently I was asked by a doctor of philosophy to explain the distinction between a civil and a mechanical engineer. I could not resist the temptation to reply at first that there was none, since every mechanical engineer was really a civil engineer, the one being the specific, the other the generic designation. I was honest enough to add that the mechanical engineers were somewhat inclined to object to this classification.

A highly cultivated woman whose son proposed to study engineering,

recently observed in my presence that she could not account for what she called her son's peculiar mechanical bent; that the male members of the family had been professional men for generations; but that her son seemed determined to become a mechanical engineer and she supposed she would have to let him have his way. She came to this conclusion in a tone of such helpless resignation as to remind me forcibly of the luckless hen who had hatched out an ugly duckling.

These instances are believed to be fairly characteristic in showing the imperfect understanding and the inadequate appreciation of the public at large of engineering as a profession. Admitting the fact, what are the reasons? If we turn to our engineering schools—which, by the way, are seldom counted with the professional schools—we find their average standard of admission and the prescribed length and breadth of their courses distinctly in advance of those in medicine and law; nor are they, to say the least, less difficult. Speaking generally, there is no course in a university held in more wholesome respect by the student body, or more carefully shunned by those in quest of "snap" courses, than those in engineering. And it may be claimed with equal confidence that there is no profession which makes more exacting demands upon its followers, and in which high honors are more difficult of attainment or, on the whole, more deservingly bestowed. Clearly the answer, whatever it may be, must be sought in other quarters.

To say that engineering as a profession is yet in its swaddling clothes is true if the reckoning be in years. If gaged, however, by the more rational standard of achievements, we find it has attained to giant's stature. We rest our claim to professional recognition upon the fact that engineering has its basis no longer in empiricism, but in science. The justice, and, in fact, the meaning, of that claim, however patent to ourselves, can appeal but dimly to the layman. His appreciation of our work is apt to be in proportion to its outward magnitude or striking novelty. To him the building of a railway means little more than an amount of digging and filling, the laying of ties and rails, and the dumping of ballast. The construction of water-supply and sewerage systems seems to consist essentially of the opening and closing of ditches for the reception of simple pipes, whose sizes, he vaguely conjectures, are fixed somehow by experience. As for the building of pavements and ordinary roadways, or canals, dykes, and levees, evidently nothing could be much easier. In short, it is impossible for him to fully grasp the idea that there is scarcely a detail of

processes apparently so simple that has not been made the subject of profound scientific study and that is not undergoing constant change in the light of new inventions and discoveries.

Another reason which militates strongly against us in shaping the popular estimate of our profession lies in the fact that the overwhelming majority of engineers are employed for fixed hours at fixed salaries. The fewest number stand in direct personal relations with their clients. This circumstance is, indeed, an unfortunate one for us from more than one point of view.

It must be conceded, too, that public appreciation of a profession and of its individual members stands in a not altogether remote relation to their earning capacity. To maintain a high social position on a slender income is becoming increasingly difficult and, in our larger communities, is well-nigh impossible. We cannot blind ourselves to the fact that the maximum earning capacity of engineers is insignificant compared with that of the most successful men in other professions. When life or liberty, character or fortune is at stake, there is no haggling over fees. Retired statesmen find apparently little difficulty in speedily accumulating snug fortunes in legal practice. I need not add that engineering offers no such possibilities. In engineering a net professional income exceeding ten thousand dollars per annum is, indeed, a very rare exception. To be sure, I am leaving out of consideration that large number of men who owe their success in kindred vocations more or less directly to their engineering training; and those to whom this training has served as a stepping-stone to salaried positions of high responsibility and trust, in lines not strictly technical.

I should apologize, perhaps, that I have strayed so far from my subject. In so far as I have kept to the text set me, I have referred in a somewhat general way to the duty of cherishing high professional ideals. This does not mean, of course, that we shall content ourselves simply by maintaining a strict personal standard of professional integrity; nor does it mean that our obligations are fully met if, in addition, we strive to do our honest share in furthering engineering knowledge. That these conditions are fundamentally important, surely none would question, and therefore they do not merit more than passing notice.

But high professional ideals have another significance, no less vital, though perhaps less easily defined, which we are prone to overlook. That is, that we should school ourselves to take at all times the broad-

est, most liberal view of our profession, not only as such, but in its relation to society; that we should be keenly alive to the danger of degenerating into narrow specialists, with small concern for matters beyond our little individual spheres, even within our own profession—much less for things that lie without. That engineers are apt to be distinctly narrow for men of their intellectual attainments is an arraignment which I fear we cannot fairly escape. How often do we find ourselves quibbling over petty details, magnifying them out of all due proportion, and incidentally obscuring larger issues! Figuratively, we often fail to perceive the city for the houses, or the woods for the trees. Applied to interests which seem to lie without our immediate professional horizon, the indictment becomes even more serious, and operates more plainly to our disadvantage. Why should high executive positions in public and industrial affairs, with duties belonging essentially within the province of the engineer, be filled so commonly by non-technical men? Is it not due primarily to these very limitations in our own qualifications? I am aware that the cause is not infrequently to be found in limitations of another nature distinctly to our credit. But that fact will not serve as a sweeping exoneration. It has come to be a trite saying that as a rule engineers are lacking in executive ability in business matters. Though we are apt to resent this imputation, and are not embarrassed for want of numerous prominent examples in our defense, yet our sober judgment tells us that it contains more than a germ of truth.

The one-sidedness of our development is due in a measure to causes normal and unavoidable. But in a larger measure the fault is one for which we are at least passively responsible. The tendency toward narrowness is apparent even among students pursuing engineering courses. Studies not strictly technical are too often looked upon as useless and slighted accordingly. This tendency is deplorable in a double sense. Not only because the purely cultural studies occupy at best a scant place in the curriculum, but because there is probably no profession which affords less opportunity for recovering such lost ground in after-life. It is a rule, rather than an exception, that engineering students are not able to write creditable English upon graduation. We are painfully aware, too, that this fault is not confined to the fledglings of our profession. Let me quote the testimony of the Past-President of the American Society of Civil Engineers, in his own words, as spoken at the last annual convention of that society, in London: "For two years, during my period of holding the office

of Vice-President, I was a member of the Publication Committee, and I was surprised at the manner in which some papers were presented. What I am saying now is of course not for general publication, but simply for the members of our Society. . . . If some of the papers presented to that Publication Committee by men who stand high in our profession had been presented by pupils of a high school, they would never have been permitted to receive consideration." Those of us who have served in a similar capacity can appreciate the justice of these strictures, humiliating as they are. And it is better that they should be emphasized too strongly than that they should be glossed over.

We owe it to ourselves and to our profession to recognize the danger to which I have alluded,—the danger of unsymmetric development,—and to make well-directed and persistent efforts to escape its consequences. We should seek to keep in intelligent touch with the world of men and affairs. We should strive to take a generous interest in all higher lines of human endeavor. We should try to cultivate a taste for art, an appreciation of good literature, and of all else that makes for culture and refinement. We should have a proper regard, too, for social forms and usages, by estimating them at their true worth. To despise, or to affect to despise, the amenities of life is almost as censurable as to make them the chief aim and end of one's existence.

And, in conclusion, I cannot refrain from voicing my profound conviction that in the measure in which we, individually and collectively, shall succeed in meeting more nearly the ideals thus broadly indicated, in that measure we shall speed the day when public sentiment will accord to engineering that honorable place among the learned professions to which its title is in reality so clear.

THE DUTY OF THE ENGINEER TO HIS CLIENTS OR EMPLOYERS.

JOHN BIRKINBINE.

The committee has divided "The Duty of the Engineer" into four sections, but I shall speak only of "The Duty of the Engineer to His Clients or Employers."

In accepting the division as planned, we merely segregate the duty

of the engineer for the purpose of discussion, for no engineer can perform his full duty who forgets either his individual reputation or the honor of the profession which he has chosen, or who fails in loyalty to his clients or employers, or who is unjust to contractors or contractors' employees performing the work under his direction, or who does not realize the integrity of his work, and his conduct is the gage by which the general public measure the engineer.

The section which I discuss presents two general classes—"clients and employers"—as those from whom the engineer is expected to earn his living, and the following definitions are offered as distinguishing the classes:

An engineer's "client" is an individual, firm, or corporation calling upon him for special or temporary service, the performance of which terminates the relations. This connection may cover a single engagement, or it may represent a series of periodic or spasmodic engagements. But in each particular case it may be assumed as a general rule that the more faithfully and energetically the engineer represents a client, the earlier his temporary engagement terminates.

An "employer" may be considered as an individual, firm, or corporation, served by an engineer under a regular compensation for a specified period, actual or implied, assurance justifying the expectation that loyal service will bring advancement, or at least continued employment. To state the distinction briefly in shop vernacular, an engineer when serving clients faithfully is "working himself out of his job," but when loyally representing employers he is "holding down his job."

The ethics which govern a true engineer are the same in each case, and he will be as faithful to the interests of clients during a temporary engagement as to those of employers under a longer term.

Accepting the definitions of client and employer, the relations of the engineer may be expected to be closer and more confidential with employers than with clients. The almost constant contact of the engineer and employer permits of mutual confidences, the abuse of which by either party is little short of criminal—confidence which permits the principal to trust the engineer and the latter to advantageously serve his employer.

Under normal conditions a client and the engineer meet often as strangers, the engineer being selected because of his reputation and the client served because of his reported financial standing. Each must, however, meet the other in confidence, and clients often place impor-

tant interests at the dictum of an engineer almost unknown personally, this action being dictated by the reputation of the engineer. The profession may well be proud of such recognition, and as the reputation of the engineer is his capital, he is a fool who impairs it by acts which jeopardize his good name among men, and bring to him the unrest which follows deviation from the path of rectitude. Being treated with confidence, it is his duty to deserve such recognition by faithfully guarding the interests of either client or employer.

In his intercourse with clients and employers the engineer co-operates with all phases of the "genus homo." He may find the individual or company employing the engineer because of special knowledge, generously recognizing this knowledge, and giving him unreserved confidence, unless the engineer demonstrates incapacity or violates this faith, when a directly opposite course is justly pursued. But the work is not always so pleasant nor the duty so plain. The engineer meets with those who, failing to discriminate between power applied and power exhibited, run great risk by demonstrating brief authority, often with a result such as befell the owner of a fractious horse, who grasped the reins from the hands of a competent driver at a critical time. The driver, of course, was blamed for the loss of the horse and vehicle and for the crippling of the owner, while the owner was at fault.

There are occasions when the engineer must assert his position in opposition to a client or employer, but such assertion should be based upon his interpretation of loyalty to the interests intrusted to him, and not by wounded pride. Circumstances may arise which demand that to protect the interest of his client he must refuse to follow a procedure suggested, or to follow it under formal protest, although such action may jeopardize his position or engagement.

A little learning is quoted as being dangerous, and probably in no situation is this axiom more evident than when the engineer is serving municipalities. It is when he has the public for a client or employer that one realizes how rapidly engineers are developed from men whose training or education has given neither experience nor knowledge in this specialty, but whose opinions or advice are volunteered freely and often urged with persistence. In such relation the engineer may unwittingly become a factor in local politics; for if the public improvement which he is called to direct is formulated by one political faction, all connected with its prosecution become targets for opposing factions. Under these circumstances the engineer is also apt to learn from the press what was evidently undiscovered or overlooked before—that the

community has a liberal supply of local talent with capabilities equal to or exceeding those of the engineer, which talent could have been procured at a fraction of the munificent (so called) compensation which is paid to the incumbent.

In determining his duty to the public as client or employer the engineer may have difficult problems to solve, and in performing this duty he may need to show bravery equal to those who face the cannon's mouth; to exhibit judgment as keen as that of a competent jurist; or to demonstrate a determination to overcome obstacles fully as pronounced, but seldom as fully recognized, as has made great generals or noted managers.

An engineer may hold his position in municipal government by being subservient to political dictation, but then he should be classed as a politician and not as an engineer, or he may satisfy himself, but gain no lasting credit, by attempting to shift responsibilities upon others. He who fills a position of this character with the greatest credit,—and credit is not always synonymous with applause,—or who serves the public best, must act from unselfish motives, exhausting to the limit his authority before he is entitled to consideration by reason of the inactivity of superiors or uncertainty of legal status. The public is an exacting employer, but ultimately recognizes ability, integrity, and persistence. It is not quick to make a martyr of one who chronically exhibits the bonds which tie his hands; nor will it create a hero of one who extols his exploits instead of permitting his work to exalt him.

The engineer meets (more often as clients than as employers, if the definition before given is accepted) those who seek benefit at the sacrifice of the high standard which should govern him. In many instances no wrongdoing is intended or suggested by clients whose anxiety to have a favorable report upon a process, property, or project obscures their appreciation of the fact that the engineer is employed, not only because of his experience and skill, but also because he is supposed to be unbiased. No engineer takes pleasure in condemning what his clients have anticipated would result to their advantage, but he is often compelled to do this, and to realize with what apparent aversion fees are at times paid for counseling against a procedure which would cause great losses, possibly financial ruin. At times he must sacrifice prospective engagements when his knowledge of conditions is sufficient to demonstrate to his satisfaction that the result of his work would be contrary to the expectation of those seeking his services.

There is no profession which outranks that of the engineer. We can

honor the man who has studied law, or the doctor who is familiar with the human form and can tell so much of what is in it, but they do not handle the forces that engineers are called upon to master. Therefore our standards should be the highest, and such that we can always be in a position to assert ourselves and stand for what is right.

Another class of clients which the engineer occasionally meets do not hesitate to suggest compensation or fees contingent upon the favorable character of reports or results of examination. There are undoubtedly conditions which may make such a course equitable, but proffered engagements of this character are generally questionable, and in determining his duty the engineer may safely draw the line of declining any engagements the terms of which would weaken his conclusions in the eyes of either client or prospective investor, assuming that the terms were in each case known.

In specifying materials or appliances, the engineer's duty to his clients or employers requires that he secure those best suited to the purpose, at least cost to his principals, and his specifications must therefore be drawn to invite as active competition as practicable. It is the safer policy to have an excess of bids than by restrictions to place the client or employer in the real or fancied power of bidders.

Each engineer has his preferences and is entitled to express them, but in determining "duty" he is wise who encourages active competition for work submitted to him.

The engineer who chooses his profession as a means of acquiring wealth seldom reaches that goal. If he is able to live in comfort and with but moderate anxiety for the future, he is in advance of the majority of his professional brethren. With him "a good name is rather to be chosen than great riches." There are comparatively few engineers who may be considered rich, and this limited number includes men whose accumulation has been the result of judicious investment, of legacies, or of business outside of or possibly related to engineering.

With such conditions facing the engineer, and appreciated by those with whom he associates in business, the temptation is great to augment an income by means which are inviting, and some of which at least do not suggest impropriety. Probably commissions present the most subtle of these temptations, for the engineer recognizes that members of some kindred professions depend largely upon these for revenue. This is a subject which could be discussed at length, but in determining his duty to clients he may have as a guide the statement that "no man can serve two masters."

The compensations paid to engineers do not, as a general rule, equal those received by other professions in which the cost of preparatory study and work, or of library, and the expenditure of time and energy, is less. But having entered the service of client or employer, the acceptance of commissions without their knowledge and assent, places the engineer in an unsafe position; and although his earnings may be unsatisfactory, he must be true to those whose service he has entered, be this temporary or permanent.

Engineering is an exact science and it is expected to produce definite results. The client or employer submits problems which he expects the engineer to work out with the greatest practicable precision. But he is employed as a human being, and as such he is fallible. When engineers cease to err it will be after having done their duty to God and man, they pass beyond the sphere where clients and employers exist.

In determining his duty the engineer is called upon to use the exact science upon which the foundation of his profession is laid, so as to present to client or employer the nearest approach to correct results which his education and experience, supplemented by conscientious study of the work of others, permit.

With a profession that has accomplished so much, with an appreciation of its honor with as pronounced integrity as exists in any other profession or business, we cannot afford to have a standard or hold a position which is not the highest. We are called upon to handle nature's forces and the products of nature, and to put them into use. Review any special line of this work, whether electrical, hydraulic, mining, mechanical, or civil, the great bridges, the development of water-powers, the marvelous advance in electricity, metallurgy, and mining, in fact in all branches—you find a mine of wonderful achievements made by men who have been true to the highest instincts—men who have grasped opportunities, men who have been subject to and resisted temptation. When we use that German symbol "*Ich dien*"—I serve—we should not fear a finger being pointed at us when those who know we serve can say that there is a man true to himself and his profession.

THE DUTY OF THE ENGINEER TO HIS CONTRACTORS AND EMPLOYEES.

L. Y. SCHERMERHORN.

For about thirty years of my life I was engaged as an engineer, in a practice sufficiently varied to bring me into contact with nearly all kinds of contractors. During the last ten years of my life I have been more or less a contractor, and this, I think, permits me to speak at least in the light of experience on both sides of the question.

The proper presentation of the third subdivision of this topical discussion, or "The Duty of the Engineer to his Contractors and Employees," will be difficult to accomplish in the short time at my disposal. I therefore trust that this branch of the subject will be amplified in the general discussion which will follow.

The engineer in responsible charge is generally either the author of the plans and specifications upon which the work is to be carried into effect, or he is the employed agent of such author. In either case his relations to the contractor are the same. He is assumed to be an expert in the work which he designs or directs, and the assumption warrants the inference that his knowledge of the work in all its details is as great, if not greater, as that of the contractor. This assumption is justified by the usual declarations of the specifications, making the engineer the only recognized interpreter of the meaning of the plans and specifications for the work covered by the same.

No two engineering works are more than generally alike; and specific differences will exist that make each work a special study and almost a special design. Through the preliminary study given to the development of the plans and specifications the qualified engineer should be able to acquire a fuller knowledge of the details of the work than can generally be obtained by the contractor through means and time usually at the latter's disposal, between the issue of the plans and specifications and the tender of the contractor's proposal for the work. This establishes the fact that, except in simple and routine constructive work, the designing engineer has a better opportunity than the contractor to thoroughly familiarize himself with all the difficulties and uncertainties of the work. Therefore in this respect the designing engineer enjoys an advantage over the contractor which it is his duty to recognize, through the plans and specifications, by fairly placing before the contractor full information upon points which otherwise would

escape the contractor's knowledge. His duty is something more than to vaguely suggest possible difficulties and requirements, and then create for himself a refuge, by ignoring all responsibility for lack of reliable data, by providing that the information upon essential points in the specifications is not guaranteed, and that the contractor through his personal knowledge and examination will be assumed as having full and correct information upon all matters involved in the work, even though the engineer may have suppressed a part of his information. It goes without saying that the contractor has, in the end, to assume such responsibilities; but it should be based as far as possible upon a full knowledge and frank avowal of all that the engineer knows of the work.

This duty of the engineer is a delicate one, and the personal equation of the individual will largely determine his action in the matter. Should his personal views be interfered with by those of his employer, then the engineer must determine for himself how far the ethics of his profession and his duties to himself and his fellow-man will rightly permit his judgment to be overruled by his superiors. To intentionally suppress important information which would be difficult or impossible for the contractor to obtain is at once a crime against the public and an error which is more than likely to assert itself unfavorably in the work with which it is connected. Dishonesty in the administration of work will surely result in dishonest execution, and this in turn may lead to disaster, involving both property and human life.

There never was an alleged wise saw that had less foundation in fact than that which states that "competition is the life of trade." If the word *death* were substituted for *life*, the statement would be nearer the truth. In nearly all callings, intelligence, ability, and its proper accompaniment reputation, count for much in winning business success. In the other professions we never hear of assignments made on the basis of competition; and yet the engineer is too often forced to carry into effect his plans under a system of unqualified competition that is at once destructive of good results and unfair to the contractor who will only do his work in a proper manner, and whose prices are based upon such a method of work as will insure satisfactory results to the engineer and to those for whom the work is done.

Open, unqualified competition, without reservation as to awards thereunder, is an invitation and an encouragement to the incapable, unwise, and dishonest contractor to enter into competition with the contractor who believes that capacity, experience, and honesty are

essential elements both to his success and to the success of the work that is to be carried into execution. When incapacity, inexperience, and dishonesty are joined with political pull and favoritism, the premium placed upon the dishonest execution of work is such as to forbid competition on the part of contractors who do not adopt such methods.

The duty of the engineer under such adverse conditions is plain, for he must either be in a position to demand and secure the proper execution of the work entrusted to his charge, or he must retire himself from a responsibility which is almost sure to result in the dishonest execution of his plans and designs. The engineer owes at once a duty to his employees and the public, through which, by all legitimate means, the incapable and dishonest contractor is excluded from the possibility of competing for work to be done under the engineer's direction; and if it is impracticable to accomplish such an end by not allowing this class of contractors to bid upon work, the power and authority should be inherent in the specifications to permit the exercise of a discrimination which can be used to prohibit his securing the work.

The undesirability of unqualified competition is well recognized through the manner in which individuals and many large corporations invite proposals for required work or materials; viz., by placing their proposals only in the hands of such parties as are known to be capable, experienced, and honest. In the main, our cities and the general government are the only parties who do not adopt ordinary business methods in selecting their contractors, and where the only criterion is the lowest prices offered for the work to be done or the material to be furnished.

With the United States government this method of unrestricted competition is carried to the extreme, upon the theory that the bidder's or contractor's bond establishes the responsibility of the bidder or contractor; and more attention is given to very exact compliance with instructions as to the seals and notarial attestations upon the bonds than is given to the ascertainment of the fact whether or not the bonds have any real financial value. As a result of this method the government has constantly upon its public works failing and defaulting bidders and contractors, against whom legal action is seldom taken toward the enforcement of the penalties provided in the contract. While there may be a theoretic value in the moral effect of bonds and penalties named, such effect is lost upon the irresponsible and dishonest contractor, who through a long experience has gained a valuable knowledge

of shrewd methods and tricks by which he can escape their enforcement, and upon which he fully counts when he enters into contract.

The engineer who is brought into administrative contact with the irresponsible and dishonest contractor will find himself quickly engaged in a conflict, whereby the efforts of the engineer to enforce the proper performance of the work will be met by every effort on the part of such a contractor to cheapen the work, or else to prepare the way for a successful escape from the penalties of his bond, if the work is not carried to satisfactory completion. The engineer who has gone through such experiences emerges from the conflict always a disappointed, but generally a wiser, man.

From an experience of many years the speaker has been brought to feel that many engineers are inclined to hold a responsible and conscientious contractor to a more rigid enforcement, even of non-essentials, than an incapable and dishonest contractor to matters essential to the proper performance of the work. The reason for this is that it is easier to secure exact compliance from the former than even approximate compliance from the latter; but the question arises whether the engineer has a moral or professional right to attempt to move in such matters along the line of least resistance.

Considering the engineer as the direct agent of the parties who are to pay for the work done, it may not seem unnatural for the engineer to yield to the temptation of seeking the accomplishment of his work at the least possible cost to his employer, regardless of what he knows to be the real intrinsic value of the work. Adopting this view, some engineers encourage unqualified competition to its extreme, and attempt to reduce each letting of work to the methods and principles which surround the bargain counter.

Every work is worth its absolute cost as carried into proper execution under wise, economic, and efficient administration, plus a reasonable profit to the contractor. The engineer who seeks to accomplish his work at less than what he knows to be its true value violates the fundamental principles of sound business, and thereby lends himself to the perpetration of a fraud upon the public, and an injustice to his employer and his contractor.

The engineer in responsible charge of work cannot give his unqualified time and attention to the details as they are carried out in the field; he therefore must delegate this duty of immediate supervision to his assistants or inspectors. Frequently this duty falls into more or less inexperienced hands, with the responsible engineer often far re-

moved from the work, or else not easily accessible. The value is very great to the contractor and to the work of having at all times immediately accessible a representative of the engineer who, through training and experience, is qualified in an emergency to promptly act for his superior. Wisely as plans and specifications may be prepared, they are nevertheless not inspired and inerrant, and often the unexpected and unprovided-for contingency will arise that demands correct judgment and instant action, based on experience, and a large amount of level-headedness and common sense. If at such times the representative of the engineer does not possess these qualities, both the work and the contractor will be sufferers; and these are injuries the engineer has no moral or professional right to inflict on either the work or the contractor.

Carefully as plans and specifications may be prepared for works involving much detail, they can seldom provide for every variation from the normal which may occur; and when such variations do occur, the representative of the engineer who reads his specifications as though they were his Bible, expecting to find therein provision for all things, will surely be disappointed, and the work and the contractor will as surely suffer through the inspector's ignorance and misguided faith. No more unsatisfactory representative of the engineer can be found than he who is unable to call to his aid experience and common sense in interpreting the true spirit and intention of the plans and specifications.

It follows from these conditions that among the duties which an engineer owes to his contractor is that of being represented upon the work by an assistant who has other qualifications than those of being related to somebody, or one who votes on the right side, and who may therefore enjoy the favor of the district politician. An assistant or an inspector whose employment is based upon qualifications other than his fitness for the work, and whose tenure of office is not measured only by his capacity and known honesty, is an injustice to the contractor, and a standing menace to the work upon which he is employed.

The position which the engineer holds as to his employer and his contractor is without its parallel in the other professions, and his duties which arise thereunder to these parties are at once responsible and delicate. The engineer is quite generally made the only authoritative interpreter of the true intent and meaning of the plans and specifications; and the specifications more or less definitely provide that he shall determine every question, difference, or doubt in relation to and arising from the work undertaken, and shall decide every question which may

arise relative to the execution of the contract on the part of the contractor; that his estimates shall be held as final; and that his specific conclusions and decisions shall be beyond appeal.

These broad and conclusive powers would suggest that the engineer is an arbitrator between his principal and the contractor, and clothed with the fullest power of decision and action; and yet the analogy is not complete. An arbitrator should be a disinterested party, and such the engineer is not. An arbitrator should not be under the pay or influence of either party; the engineer is manifestly under both from his principal. An arbitrator should have no interest in the questions he is to decide; the engineer is called upon to support his interpretations of his own plans and words, and to justify his estimates and conclusions generally. The position and its duties are anomalous, and a legal authority, commenting on the situation, said: "Under these conditions the contractor's rights depend upon his good luck in having his work under the supervision of an honest and conscientious engineer; and that the employer's obligations to pay or to perform depend upon his approval and the behavior of his engineer;" and that under such conditions "the courts undertake to guarantee the contractor that the employer or his engineer shall not capriciously nor unreasonably exercise his power to defeat the contract, or deny the contractor his just and reasonable compensation." No engineer has a right to force a reasonable contractor to carry into the courts the determination of questions that arise between them; for most contractors know that after resort to such an expedient their subsequent lot would not be a happy one; and that their position thereafter would be sadly prejudiced.

The apparent arbitrary power given to the engineer in the usual specifications and engineering contract, and which are probably generally conceded by the contractor, have their limitations in practice. Numerous decisions of the courts stamp with disapproval contract stipulations which tend to bind parties, before the occurrence of an event, to the arbitrary reference of matters arising from such events to an arbitrator without judicial functions. Neither have the courts regarded with favor the attempts of parties to oust their jurisdiction through unqualified agreements for arbitration. It should not be forgotten that all agreements for arbitration are revocable by either party at any time before the decision has been rendered by the arbitrator. This further indicates the attitude of the law toward arbitration. A very recent case decided by Judge Lawrence, of the New York Supreme Court, well illustrates this subject. Under a contract it was provided

that, to prevent all disputes and litigations, it was agreed between the parties to the contract that the engineer should determine all questions of difference, and was to fix the amount and quality of the work to be done; and that the findings, estimates, and decisions of the engineer were to be final and conclusive. The court held that this provision in the contract was clearly to make the engineer the absolute and final arbiter as to all questions arising between the parties; that the provision in question, if made operative, would oust the courts of jurisdiction; and therefore it was decided as being void on the ground of being adverse to public policy. This decision is in harmony with well-established judicial maxims and conclusions, and is supported by a long line of decisions.

Through the very powers which are, of necessity, given to the engineer, he owes a duty to his contractor and to his employees to treat all situations and conditions which may arise with judicial fairness; and while entitled to insist upon the full and proper carrying into effect of the work undertaken, he should not forget that his contractor holds rights which honesty and justice demand shall receive fair recognition. To fully meet the requirements of such a situation and its duties bespeaks for the engineer the admirable traits which we believe are an accompaniment to the profession under its best development.

Contrast such a view of the duties of an engineer to his contractor or his employees with the following as set forth in a text-book intended for the use of the profession. "The engineer is in the interests of the proprietor, and receives his compensation from him. . . . He is not required nor expected to watch the contractor's business, nor to promote his interests, and any attempt to do so might render his position untenable, change the relations of the parties, and render the stipulation of his choice invalid." Again, the same writer states: "The engineer owes no duties to the contractor except what he can demand by the terms of his contracts; he is under no obligations to protect his interests or assist him in his affairs." I should be sorry indeed to believe that such a doctrine could be held by the engineer who dignifies his profession and its duties, and who believes that these duties have their foundation in honesty, intelligence, and justice.

THE DUTY OF THE ENGINEER TO THE PUBLIC.

JOHN C. TRAUTWINE, JR.

No engineer need be told that "duty" is the ratio between the energy supplied to a machine and the useful work rendered by the machine in return. The duty of the human machine is less easily determined than is that of the steam-engine. The track laborer probably assimilates daily more foot-pounds of energy, in the shape of beef and potatoes, than does the president of the road. Means might be found for estimating the work obtained from the machine we call the laborer, but who shall estimate, in foot-pounds, the work done by the machine we call the president, and who shall say how much of this is useful to "the public"?

And who shall estimate the *negative* or *prejudicial* work done by either of these two machines? The laborer, actuated perhaps by a laudable desire to conserve his store of potential energy, slights his work on the track, and a train is wrecked; or his fellow-machine, the president, actuated by a similar motive, wheedles or bribes the directors and terrorizes the engineer, and so causes the adoption of a bad line, favorable to his individual interests, in place of a better one, to the perpetual cost of his road and of the public.

Then there is an important class of cases well typified by the trigger of a gun, or by the key controlling the electric current which explodes a charge of dynamite, where the expenditure of a very small amount of energy, sufficient to depress the key or to pull the trigger, renders kinetic a large amount of potential or stored energy. For instance, in the case of a public speaker or writer, a few foot-pounds of energy, in the form of a beef-steak, may set in commotion a vast community, and liberate forces whose effects shall go thundering down the ages.

Human machines, like others, differ in their provision for obtaining high duty. In some, indeed, the high-duty attachment is lacking, and full pressure is carried throughout the stroke. In such cases we have perhaps a large output of work in a short time,—*i. e.*, a high *power*, but a small *total* output of work, and at a relatively large expense of stored energy; and hence a low duty.

The development of high duty is a most important branch of mechanics; and we may hope that, when something like an equal amount of attention is paid to the economy of the human machine, similarly beneficial results may be obtained.

Our subject is complicated by the fact that the human machine is its own engineer, and so is charged not only with its own protection, but also with the task of securing its own supply of fuel and of obtaining from itself a high duty. By striving for an unattainably high duty, the engineer may so cripple the machine as to impair its future efficiency; for the public displays an alarming willingness to take its machines at the word of their caretakers and to grasp from them as high a duty as they show any disposition to give.

To perform *any* duty to the public we must *survive;* and, in order to survive, we must more or less nearly fit our environment, even though that environment be such that fitness involves a higher regard for ourselves than for the public we seek to serve.

Primitive man was probably actuated solely by the divine law of self-preservation; but he early recognized the possibility of advancing the interest of the individual by subordinating it to that of the public. The mass of mankind, however, has always lagged in coming to a realizing sense of this fact, and many and clumsy have been the expedients which man has adopted in his efforts to bring his fellow-man to that sense.

The history of civilization is the history of the more or less intelligent efforts of man to adjust the relation between the individual and the public. These efforts have resulted not only in frightful abuses, but also in a vast amount of service rendered by the public to the individual. As Emerson says: "The private poor man hath cities, ships, canals, bridges built for him. He goes to the post-office, and the human race run on his errands; to the book-shop, and the human race read and write of all that happens, for him; to the court-house, and nations repair his wrongs." Truly, while we may not say, "Public, with all thy faults I love thee still," we must at least say, "Public, I owe thee a duty."

Man, we are told, is inherently wicked. And yet, give him half a chance and he is not such a bad fellow. Most of his offenses against the decalogue and against its modern amplifications are the protest of his nature against the clumsy attempts of the public to adjust his relations, attempts in which the public has often needlessly interfered with his natural tendency to follow the divine law of self-preservation. It is not the morals of man that are at fault, but his intelligence. A cry of fire in a theater awakens the enthusiastic obedience of an audience to the law of self-preservation, and its members tear and trample each other in their blind efforts to follow that law. Yet remove that urgent

distress, and those same people will sit peaceably side by side. Now, society, in spite of ages of advancement and enormous progress toward organization, still remains in a state of panic as regards provision of the necessities of life. To the great majority of mankind life is, at it has ever been, a fierce struggle for the means of existence, with a constant dread of being overcome in the struggle. Under these circumstances, the wonder is that man is as good as he is.

And on every hand the toiler sees those most prospering who ruthlessly disregard the public good and seek only their own. The ambitious warrior, the unscrupulous financier, and the crafty politician reap the substantial prizes in the game; while the faithful teacher of infancy, than whom no one deserves higher rewards at the hands of society, may be thankful for a bare subsistence; and engineers need not be reminded that, after a lifetime of patient toil in the public service, they will be fortunate if, in closing their eyes, they can say that they owe nothing. Taking the public at its word, as we read that word, not in printed books, but in life, we should find our duty written: "Buy cheap—sell dear."

In olden times society awarded her prizes to the physically able. He who could most successfully rob his neighbor by brute force was the best fellow, and of course got away with the spoils. To-day we forbid such methods to the individual and laud them only in nations, or rather only in our own nation, whether that be the British or the American. The high individual prizes now go to those who combine shrewdness and unscrupulousness. When society so contrives that her prizes are proportional to the service rendered *her*, our children will wonder what we meant by the inborn depravity of man.

More than ten years ago Bellamy popularized a thought which had long been cherished by scholars, and preached by them to their limited audiences. Looking backward a few centuries, he saw the mass of mankind practically savage and disorganized; but, coming nearer to his own time, he saw on all sides increasing evidences of a tendency toward organization. With true engineering instinct, he sought the equation of the curve; and, having, as he believed, found it, he proclaimed that the combination of business interests would proceed, in geometrical progression, until, during the present century, all such interests would be merged in the hands of a coterie of men, who would practically own, not only the earth and the fullness, but also the inhabitants thereof—until some fine morning these inhabitants, awaking to their condition, would serve notice upon their owners that they would

be allowed to remain, on salary, in charge of the conduct of affairs, which, however, should thereafter be conducted in the public, not in the private, interest.

Of course, the Philistines "laughed enormous laughter and they groaned enormous groans."

> "Said one: 'This is chimerical! Utopian! absurd!'
> Said another: 'What a stupid life! Too dull, upon my word!'
> Cried all: 'Before such things can come, you idiotic child,
> You must alter human nature!'—and they all sat back and smiled."

To-day, were Bellamy alive, he himself might well stand aghast before the rapid development of his curve. Startled, at breakfast, by the news of some great aggregation of capital, we read in the evening papers that it, along with a dozen others, has been merged into a greater, which, in turn, goes into another merger while we sleep it over. I recently asked a gentleman connected with one of our large corporations whether he could tell me just who were his owners or proprietors at that time. His reply was to the effect that he was blessed if he knew. An advertising agent recently wrote me, respecting a matter which involved a canvass for advertisements: "We ought to start as early as possible, as every day large firms are combining or going into trusts, and then feeling that they do not require any advertising."

The new era is advancing upon us with such enormous strides that it is merely rational to consider what the public will be under its profoundly modified conditions, and what will be our duty to *that* public, rather than to spend much time in nice examination into what that duty is to-day, seeing that to-day will so soon be ancient and forgotten history.

Consider the personnel of our Club to-day; compare it with that of twenty-five years ago, and note how large a proportion of our members now are employees, either of the municipality or of giant corporations, the like of which were not dreamed of then, and which, in turn, are but puny infants compared with what those will become which are now moving in the great womb of the community.

In the new dispensation, the employers will be few, and of these few, engineers need not hope to form a large percentage; for nature rarely combines that high sense of rectitude, so essential to the engineer, with that supreme regard for No. 1 and disregard of all lower numbers, without which business mastery is practically unattainable. What, then, is to be our relation to this coming giant, and what will then be our duty to the public?

In the first place, the giant, in so far as we have been able to make his acquaintance (and he has as yet scarcely reached the nursing-bottle stage), seems to be less rapacious than we should have been justified in fearing. At least, the average employee of the great corporation of to-day certainly fares better than his brother who, fifty years ago, fell into the clutches of one of the small-fry producers of that day, and in many cases we hear of almost princely care for the comfort and well-being of such employees.

Is this altruism? Is the germ of a soul developing in the corporation after all? I believe it is; but I believe also that this is the result, not of preaching, but of evolution. The necessity of protection against himself drove man, in spite of his savage tendencies, to suppress self and to organize society. Out of this necessity, and not from the preaching of abstract morality, mankind has grown less savage. And so an enlightened self-seeking, and not unselfishness or brotherly love, on the part of the great corporation, is leading it to treat its slave and customer more nearly in accordance with the golden rule.

And when we have *all* become not only the employees, but also and at the same time the customers, of the great combination, will it not find it still more to its interest to conserve our welfare? Or, if it does not do so of its own accord, will not the opportunities for concerted defensive action on our part be greatly increased by our being all chattels of one institution? And will not our position be strengthened by the fact that, as there is but one employer, so also there is but one body of employees?

The private firms and small corporations of the past régime quite commonly indulged in all manner of expedients to delay, or even to avoid, payment of just and acknowledged obligations; whereas no one, having such a claim against one of our great modern corporations, gives himself the slightest concern about it. Payment comes in due course, as surely as the sun rises, for the corporation finds that such action pays —that the profit to be derived from worrying its creditors will not pay the cost of the process. Here we have another illustration of the fact that man, after all, is a pretty good fellow. While all business was beset with pitfalls, and the whole operation resembled a Donnybrook Fair, the conditions were such as to develop, and to render hereditary, a tendency to squeeze and fleece our fellow-men by every possible method; but the great corporation, finding an assured and profitable business, can and does afford to rise above these petty resources of the old-time business man.

And so, it would seem, is being brought to pass the saying which was written: "The wrath of man shall praise Thee." What all the preaching of nineteen centuries and all the blood of the martyrs could not bring about, is being brought about by—man's selfishness. It has been well said that the undevout astronomer is mad; but what shall we say of him who observes this masterpiece of the divine cunning and remains undevout? Verily, a Machiavelli or a ward leader may well remove his hat in profound respect for superior art, as he sees the great Engineer of the Universe thus "forging, through swart arms of offense, the silver seat of innocence."

Emerson has well said that the men whom we regard as great—the Cæsars, the Napoleons, the Shakespeares, the Wanamakers, the Morgans, the Quays—are simply those who have been able to discern the direction of the human current of their day, and have put themselves in line with it, like a well-placed pipe or culvert, and not athwart the stream.

To-day we go bungling about, with but imperfect means for ascertaining the direction of the current, and perhaps still less perfect facilities for placing ourselves in line with it when found, owing to the equally ill-directed and conflicting efforts of our fellow-pipes to do the same thing. The result is a tangled mass of pipelets, thrown together pell-mell, a vast majority of them more or less nearly square across the stream and getting no water to speak of, but only heaping up a vast head of pressure, which sends the stream in millions a month through the Carnegie and a few other pipes which, by knack or by luck, have secured both large and smooth bore and axial location, while it breaks and starves the little pipes that get wedged in crosswise between the larger ones.

Fortunately, the very existence of these great pipes, in axial positions, though cruelly hard upon those that get crushed in the shuffle, is of vast service to the mass as a whole, and so, eventually, to those small pipes that succeed in surviving the process of adjustment; for the success of the great pipes not only advertises unmistakably to all the direction of the current, but renders it increasingly difficult to get into false positions. It thus facilitates the attainment of a proper adjustment, except to those who, from belonging to a past order of things, find themselves hopelessly anchored fast in crosswise positions.

Under the coming dispensation our "public" will be simply our fellow-employees and fellow-customers of the great combination, and our duty toward them will be determined, and posted up for our infor-

mation, by our masters and owners, who will have become our government and our God.

For some years, however, we shall no doubt maintain the fictions of a "public," of public business and of public officers. What of the duty of these public officers or servants? Manifestly no one answer can be given covering all such cases; for in the large majority of these cases the public engineer will be, as he is to-day, a mere subordinate to a servant in higher rank, who will prescribe his duty for him; but, in the official lives of public servants of the higher grades there must arise daily questionings as to what the interest of the public demands, not merely as to technical matters, where the answer will depend upon mental processes, but as to questions of what we call "morals."

Contrary to the fond imaginings of our childhood, the business and political world is not a Kindergarten, where all are lovingly co-operating, with an eye single to the public good; but a menagerie, where a mob of imperfectly civilized animals returns daily to the struggle for existence, and where the trail of the serpent of self-interest is over it all. Practically all have harkened to the still small voice of Society as she whispers "Look out for No. 1," while she shouts "Obey the law," and they would be but childish and would deserve the consequences if they ignored her whispered warning.

How does his duty require the conscientious public engineer to conduct himself? Shall he plant himself squarely amid-stream, say what he thinks, and go down before the current, or shall he better serve his day and generation by being at least some things to some men? Shall he set his arms akimbo, and strive for an unattainable ideal, refusing to rest satisfied with any compromise, or shall he go with this current and with that, adjusting his shape and dimensions to this and to that tendency, hoping thereby the more surely to reach his goal—the public good?

For instance, a government engineer, in charge of the harbor work affecting a large city, plans and conducts a certain line of improvement. The Mayor of the city, a man without special training in harbor improvement, but of demonstrated ability in certain lines, and quite remarkable for his keen scent for public abuses, enters the professional field, and announces that he will veto any appropriation that does not in a certain respect reverse the engineer's method of procedure. Those of us who, as engineers, know something of our limitations, will refrain from taking sides upon a question wherein experts differ; but his Honor's criticism appeals to what the newspapers call "the common sense of the public,"

and the City Councils continually and with loud voice proclaim their absolute subjugation to his authority. Evidently, persistence, on the engineer's part, means diminution of appropriations.

Now, what is the engineer's duty? He modestly disclaims authorship of the remark that his Honor "could not understand the elements of harbor improvement, even though they were explained to him in words of one syllable," and yet he must know that the remark applies to the overwhelming majority which he finds arrayed against him, including the newspapers, whose harbor experts naturally side with "the common sense of the public." Shall he bow to the ignorant mob, recant his alleged heresies, and thus secure city and state appropriations for the work he has at heart, or shall he stand to what he believes to be technically right, and so deprive the work of those appropriations?

For us to attempt to answer this question for the engineer would be, if possible, even more foolhardy than for us, without special training, to dictate to him where he should dump his dredged material. The engineer must wrestle with this question for himself. He must decide whether the public interest will suffer most by following a plan which he disapproves, or by depriving it of needed means.

Instinctively we applaud the man who stems the current, even though he goes down before it; but it is by no means certain that we are right in so doing. May he not properly wink at popular prejudice and ignorance, and apparently travel along with them for a while, if thereby he may in the end more certainly guide matters into the proper channel? With his head above the clouds, may he not plant his feet upon the earth?

The answer must depend, not only upon the abstract merits of each case, but largely upon the man himself and upon his organism. Not every man has the moral courage to take the one course, and so not every man has the dramatic talent to follow the other. Actors, like some other professionals, should have good memories; and many an engineer, if he were to attempt to trim his sails to the fickle gusts of public and political favor, hoping thereby to bring his vessel the more safely into port, would assuredly capsize it and would find himself the proper laughing-stock of those whom he strove to serve.

But for every man there is a duty which no corporation can compel or control and for which no money can pay. It lies within the power of every man, whether engineer or not, to be of greater or of less service to his day and generation; to contribute more or less to the general intelligence and enlightenment, and thus to do more or less to bring

about that millennium for which we are all yearning. He may do this partly perhaps and occasionally by precept, always and chiefly by the life. Precept may be administered from time to time, as occasion offers, but is seldom accepted and still more seldom followed. The example of a right life is a continuous performance, and the audience is always in its seats.

Sordid as we are, we are not wholly so. All is not done for pay. The young engineer who ran his elevator while the building was falling, and whom we may well be proud to claim as a member of our profession, knew that his pay did not depend upon his saving the last three women who still remained aloft.

I follow the example of a good friend in closing with a quotation from Ruskin:

"And so with all other brave and rightly trained men. Their work is first, their fee second—very important always, but still second. And with some people just as certainly the fee is first and the work second, as with brave people the work is first and the fee second. And this is no small distinction. It is the whole distinction in a man; distinction between life and death *in* him, between Heaven and Hell *for* him. You cannot serve two masters; you must serve one or the other. If your work is first with you, and your fee second, work is your master, and the Lord of Work, who is God. But if your fee is first with you, and your work second, fee is your master and the Lord of Fee, who is the Devil; and not the Devil, but the lowest of devils, the 'least erected fiend that fell.' So then you have it in brief term; work first, you are the God's servant; fee first, you are the fiend's. And it makes a difference now and ever, believe me, whether you serve Him who has on His vesture and thigh written, King of Kings, and whose service is perfect freedom, or him on whose vesture and thigh the name is written, Slave of Slaves, and whose service is perfect slavery."

GENERAL DISCUSSION.

James Christie.—By following the advice of Polonius to his son, "To thine own self be true, thou canst not then be false to any man," the duties of the engineer to his clients or employers are disclosed when we define his duty to himself and to his profession.

No rules can be formulated exclusively for the engineering profession but that, in a general sense, would apply to all professions and trades and to humanity at large.

In the case of the legal profession, it is frequently asserted that the duty of the

attorney is to stand by his client, right or wrong. As rigidly interpreted this would imply that he might be called upon to defend a cause that could not be justified by any device of the casuist.

Enterprises of a stock jobbing character are not unknown, where an appeal is made to the public to participate in an investment, built up on a slender foundation of facts, buoyed and sustained on unstable elements, and all bearing the indorsement of engineers well qualified to judge of the merits of the enterprise.

Instances of this kind have occurred most frequently in the mining industries, but instances of the same character, and of questionable integrity, have not been unknown in the metallurgical world. It is quite true that it may be frequently difficult to decide on the exact merits of enterprises of the kind referred to. Quite often the result can only be known after much labor and money have been expended, and most of us, according to the old adage, "try to believe that which we wish to be true."

When, however, ordinary investigation proves that the object proposed is not sincere, and is largely intended to enrich the promoters at the expense of the public, then no engineer is justified in lending his name to the imposition.

I desire to make a few observations on the duties of the engineer inspector to his clients or employers. It frequently happens that the inspector is a young man, fresh from college, possessing a good book education, but is limited in his experience of workmen and materials. He probably has the impression that in order to serve his employer faithfully and be worth his salary he must be constant and insistent in his criticisms. His fault-finding habit grows upon him, until he is a positive obstruction to the successful prosecution of the work in view. I can recall many instances where such a man, with the very best intentions, has succeeded in making himself objectionable to the contractor, without winning the support of his employer. In extreme cases, the hypercritical inspector has had to be removed from the work, in order to permit of its progress.

On the other hand, the observant and conscientious man will point out faults when good cause exists, avoiding interference for unimportant trifles. His criticisms, when analyzed, prove to be well founded, always grasping the substance without chasing the shadow. This man gains the good-will of his employer, as well as of the contractor and his employees, and success is bound to attend his efforts.

Wm. Copeland Furber.—I want to say a word regarding the relation of the engineer to the contractor. There is a prevalent belief in the minds of many engineers and architects, I may say, and particularly among the young ones, that they hold by divine right a superior position in all respects to the contractor; that they are not subject to the same laws which govern the contractor, and that they are the law-givers and the contractor is the law-obeyer. This belief leads the engineer or the architect into a very false position, often a very arrogant position, and in most instances into a very wrong position. All the rights the engineer has over the contractor are those delegated to him by the terms of the contract.

It is unfortunately true that the rank and file of contractors in many lines of work in the past have frequently risen from illiterate workmen, men of force and aggressiveness, but with little acquaintance with scholarship; and this condition, prevailing so generally, and the engineer or the architect having, or having pretense to, education, and generally occupying a socially superior position, has

unconsciously perhaps led to the growth of the tradition in the minds of engineers that the engineer can do no wrong, and that his interpretation of a plan or specification is, and as a matter of fact must be, right. It is true that some one must be in charge of the work, whose decision should be final, subject, however, to appeal in proof of error, but this clause usually embodied in the specification and contract is interpreted by some men in charge of work to mean that their decision is right even if in violation of the specification.

The fact also that contractors have been in many instances men of but little sense of responsibility and honor, and ready to take advantage of every quibble, has led to the tightening of the contract and in many instances to an enforced waiving on the part of the contractor of his common rights. However, this is a temporary condition, and when the business, social, and scholarly standing of the contractor improves, as it will by the advent of younger men of superior education, the engineer must give way to a full recognition of his rights.

The relation of the engineer to his drawings and specifications, and to the client and the contractor, is a delicate one and a very difficult one, and unless he is constantly on his guard, he may unwittingly do wrong, and injustice may be done to one of the parties concerned. Therefore the temperament of the engineer must be a judicial one.

It is a curious position, and contrary to all principles of judicial procedure, that the drawer of an instrument should also be its interpreter, and that his interpretation should be without appeal. For while it is true that a man may know best what he meant to say by his own words, yet the writing loses this personal quality when it becomes the medium of contract. Words have a specific value to the scholar and a general value to the layman, and a wide difference may exist between the two values. The aim, therefore, in writing a specification should be to avoid the use of words or manner of using words from which two interpretations can be fairly drawn.

It is not an unheard-of custom of some men to draw a specification in such a vague way that the contractor is misled in bidding; and a subsequent performance wholly beyond the usual is exacted. It requires no extended argument to prove this method peculiarly dishonest.

The drawings and the specification should be so drawn that every thing which is to be done or called for is fully set forth in as simple a manner as possible. Some architects claim that if the drawings are complete to the details the bids run high; and while this may be true with ignorant bidders, yet a determination on the part of the designers not to practise evasion in this respect would soon establish a standard, and competition would soon correct high bidding. This method of evasion, however, has the opposite effect of raising the level of all bids eventually by a sum sufficient to cover the uncertainties. The man to whom the position of arbiter is given by the contract should remember that his decisions are binding upon the contractor and the owner only just so long as they are fair; the moment his decision is dishonest, the principles of equity relieve both parties to the contract, and the arbiter's award is thrown aside.

The engineer's position must be an impartial one, and he should know neither fear nor favor; he has no right to give the contractors that which the owner will pay for, neither has he the right to give the owner anything which belongs to the contractor. If he fails in any degree to fulfil the trust reposed in him to the utter-

most extent, he causes injustice to one or both parties, and perhaps to both. He injures his own character, and finally lessens the respect in which the engineer should be held, and thereby brings injury and distrust upon men in the same calling whose aims and practice may be on the highest plane of fair dealing.

A. Falkenau.—The relation of the engineer to the lawyer has various aspects. Judging from my own experience in the past, having a number of times been called as expert witness, I would reverse the dictum of the prominent British barrister who stated that the most trying witness is the engineer. Of all the professional men I have come in contact with, when dealing with engineering subjects the lawyers are the most unreasonable and thoughtlessly stubborn. They seem to believe that the same method of contradiction and browbeating which they apply to questions of mere memory is applicable to matters depending upon well-known physical laws. Unfortunately, there are some engineers—but they are very few—who will dishonor the profession and stultify themselves in the attempt to serve the side which calls them. When an engineer is asked to testify professionally in a case, a serious duty lies before him, and it appears to me that there is but one way for him to proceed; if upon investigation he finds he cannot give support to the side for which he is called to testify, he should frankly say so and decline to serve. Even when the engineer feels himself upon perfectly solid ground, in testifying he has a difficult task to so express himself as to make himself understood by judge, lawyer, and jury. One great difficulty with lawyers in general is their entire lack of training in the science of physics, and relying upon an equal ignorance on the part of the jury, they believe they have an easy task to demolish any apparent conclusion by their cross-questioning. As an illustration of this, I would cite a case in which I was called as expert for the owners of a mine in which a man was killed while riding in a bucket down a shaft. It had been shown that the engineer had lost control of the brake of the hoisting drum, due to a half-inch rod breaking, which connected the hand lever with some other levers in the brake mechanism. The attorney for the opposing side put the question, "Would you trust yourself in a bucket weighing several thousand pounds held by a half-inch rod?" I stated that I could not answer the question in that form, but the attorney insisted again that I must answer yes or no to the question. Upon my continued refusal, he requested the court to demand an answer. The court, however, permitted me to explain that to answer the question it would be necessary first to know just what position the half-inch rod occupied in the entire mechanism, as the leverages could be so arranged that a child could control the brake by holding a thread. The court supported my position, and the attorney, whom I personally knew well, dismissed me in disgust, but still failed to understand the point. He later on said to me that we engineers are the most unreasonable and obstreperous witnesses the lawyers have to deal with, as we will not answer the simplest questions such as he had put to me. I answered that the adage that a fool can ask more questions in five minutes than a wise man can answer in ten years was one that lawyers might well consider in dealing with engineers. The truth is that lawyers are out of their proper sphere when they deal with the questions of engineering. There is no doubt that in the legal field there is need for some other method of settling questions of engineering science than by the argument of lawyers and conclusions of a still more ignorant jury. Questions of this nature might be referred to a board of reputable engineers. I believe that this

has been done in a few instances. If this were more frequently the case, it would open a good field in which the abilities of the engineer could be brought into play.

The suggestion of the first speaker, Professor Marburg, that the education of the engineer should be broader, that he should not seek merely technical education, is well worth consideration. The engineer ought to seek as broad an education as possible, for no matter what branch of engineering he may enter, it brings him in contact with fields which lie outside of engineering proper. Thus, the business field, for instance, of the financial side of engineering, the average engineer has little conception of. I am reminded of Professor Coleman Sellers' statement of what a true engineer is. He said that the average engineer thought it was the most thorough and scientific accomplishment of the work necessary to solve a given problem. At first sight this would seem a complete definition. He added, however, "Give me plenty of time and plenty of money and I will solve almost any engineering problem. True engineering requires the accomplishment of the end in view within reasonable financial limits." This proper balance between the financial and purely scientific side of engineering work is a most important point for the young engineer to consider as he goes out into life. I believe that some engineering schools are now introducing courses dealing with economic questions, such as cost, the history of trade, relations of labor and capital, etc. The modern great combinations would seem at first sight to relieve the engineer from contact with business or financial questions still more than in the past, but I believe that the subdivision of labor will be on a broader basis than heretofore, and certain business and financial questions will have to be settled in every department, instead of by the heads of the establishment as heretofore.

It is certainly much to be desired that the standard set by the second speaker in dealing with the relation of the supervising engineer to the contractor should be adopted more generally. It is unfortunately the rule to consider more the limits of legal obligation than the patent moral obligation in a contract. I doubt whether the average financial man who controls a large undertaking would side with Mr. Schermerhorn in the view that it ought to be the engineer's duty not only to see to the execution of the work according to the letter of the contract, but that he should guard the contractor's legitimate interests under it. On the contrary, as a rule the engineer is expected to interpret, where possible, every clause to the disadvantage of the contractor, and as a consequence a vast amount of injustice is done.

A. H. Holcombe.—As one of the younger engineers, I think the thought brought out by Professor Marburg is the most important one—that an engineer should be a true gentleman. If we are such, I am sure we will be more useful to our employers; we will receive better service from our employees; we will be of more use to the public, and we will raise the acknowledged standard of our profession. As Mr. Birkinbine has said, we are members of the best and noblest profession. If this is so, I am sure we should all recognize our duty and be true gentlemen in the broadest sense. Several years ago I saw a cartoon published in "Life" which made a great impression on me and which carries its own moral. The scene was some work of construction. In the background was an engineer, near his surveying instrument, jumping up and down and berating his assistant, probably for some dumbness which engineers sometimes cannot understand unless they have been in a lowly position. In the foreground was an elderly man visit-

ing the work of construction. Near him was a laborer. The cartoon was headed "What's in a Name?" The visitor said to the laborer: "Who is that man howling and cursing at everybody?" The laborer said: "Sure, sir, he's the *civil* engineer." [Laughter.]

MAX LIVINGSTON.—Speaking about the necessity of educating engineers, I think it is very important to have the public understand what the engineer has to do. The trouble is that a number of men in very high positions, having worked themselves up from, well, I might say, the pick and shovel, look down on the trained civil and mechanical engineers as a certain political element looks down upon the "literary fellers." An instance of this kind came to my notice within the last few months. A friend of mine, whom I thought rather deficient in mathematics, who yet wanted to be a civil engineer, asked me whether I could not help him to secure a position after he had finished his course at the University. I told him he should first try to get through and afterward I would see what could be done for him. About that time I met an acquaintance holding a very high position in an engineering establishment, and I mentioned this young man and his possible shortcomings. To my utter astonishment the man said: "What difference does that make? I can hire the best mathematicians at two-fifty a day." Well, I felt inclined not to encourage my young friend in prosecuting his studies, as the outlook did not seem very promising. Another thing; some gentleman, I think it was Professor Marburg, spoke about the attainments and achievements of engineers as compared with other professions. The difficulty, I think, lies in the fact that with engineers two and two are four, while with many of the other professions two and two are often five. That is, the public cannot see when these other men make mistakes, as they can be hushed up and remain secrets forever, whereas errors of the engineering profession cannot escape public criticism, for if a bridge should fall, a dam break, or the foundations of a house give way, the whole world finds it out and is only too ready to condemn the engineer.

THE PRACTICAL BUILDING OF LOWLAND PROTECTIONS.*

PERCY H. WILSON.

Read September 21, 1901.

Bordering the tidal rivers in various parts of our country, and exposed only at low water, are many million acres of marsh-land, covered at high tide by water, and growing aquatic plants and a variety of reeds. The land, when reclaimed through the building of banks to exclude the tide, makes, without exception, the most valuable on the farm; three crops per year being the average, and this without artificial means used by farmers to force their crops.

The building and maintenance of these banks, or lowland protections, have become a most important consideration for the farmer, and, naturally, there have come into use many methods of accomplishing the result. Mud, usually the most convenient material, forms an important detail in all these methods, many revetments being built of that alone. There are cases, however, where mud will not stand alone, and three general methods of protection are mainly used, viz.: (1) Stone, without cement, laid as riprap; (2) Timber work; (3) Stone with cement, or concrete.

It is my purpose to give a description of the practical building of banks with their protections, accompanied by sketches showing detailed plans of representative constructions in each class, noting briefly the difficulties encountered in each form of construction, and the advantages and disadvantages of each.

Mud Revetments.

History.—The first people to develop the building of large systems of mud revetments were the Dutch, and they, from necessity, are at present probably the most experienced, although we, with our great expanse of lowlands bordering on the Mississippi, are not far behind them

---

*This paper is an abstract from a thesis presented to the Civil Engineering Department of the University of Pennsylvania for the degree of C. E.

either in experience or skill. On our own river (the Delaware) we have much meadow-land exposed to tidal action, and our engineers have become quite expert in the handling of the problems of protection.

Past and Present Methods of Building.—Originally all the banks were built entirely by hand, the men working on the marsh at low water only. The site of the bank was selected well back from the water-way, leaving fifty or a hundred feet "berm." Then a ditch was laid off back of the site of the bank and dug, the material being cast up on the river side of the ditch forming the bank (Fig. 1). Thus with one handling of material the bank was built, and a drainage ditch back of the bank dug; a thing in those days considered as important as the bank itself. The finished product is well shown by the sketch, including the almost universal accompaniment to this form of bank, the muskrat hole.

These old "mud men," as they were called, were heroic workers, and deserve their meed of praise. They are, with the possible exception of ship carpenters, the crankiest set of men I have ever known. But

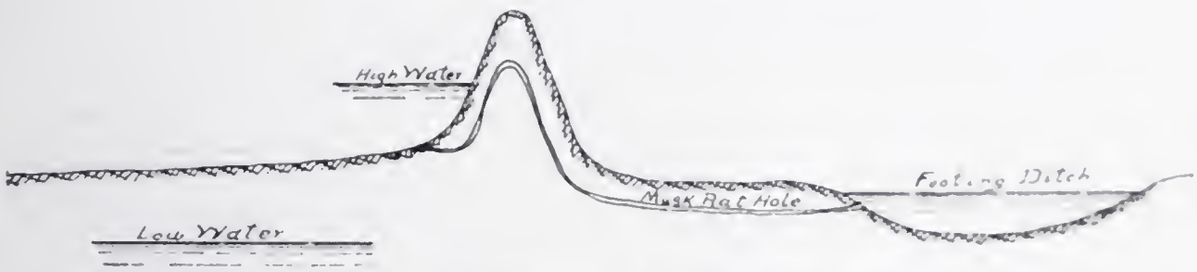

Fig. 1.—Common Type of Hand-made Bank.

what work they did! Ten hours a day, with a half hour's rest at noon, they stood waist deep in mud and water, casting up neatly cut squares of mud, often at least a distance of ten feet. Several years ago a number of these squares were weighed, and they averaged one hundred pounds each, their weight not varying ten pounds. A skilled man handles from ten to twelve yards of mud per day.

It has gradually come to be recognized that the "backing" or "footing" ditch, as it is called, is not only a disadvantage to a bank, but a detriment. A musk-rat will not dig his hole unless he can find water at both ends of it, and filling up the "footing" ditches has greatly decreased the nuisance. Many banks are gutted by these animals, being dangerous to walk on in places, wash-outs occurring frequently, and where not immediately attended to, widening into breaches.

Out of these various troubles has come the modern way of building a bank—viz., by the help of the dredging machine.

Details of Construction.—The majority of meadows which are of any account have these hand-made banks, and at present the principal work is to top them up and stop the breaches. A dredge is taken to within about fifteen feet of the foot of the old bank and material cast over behind it, raising and broadening it and also filling in the "footing" ditch (Fig. 2). This material is put on by instalments, time being allowed between each for the material to dry out. The first time, only enough material is taken out to allow the machine to work four or five hours on each tide; the next time, as much mud is put on as will stand, without too much slipping; and the third time, only enough to piece out the bank to the required dimensions. Where the mud slips so badly that all control is lost, a light bank is sometimes erected at the back, about where the proposed slope strikes the meadow. This helps pile up and prevents much loss of material.

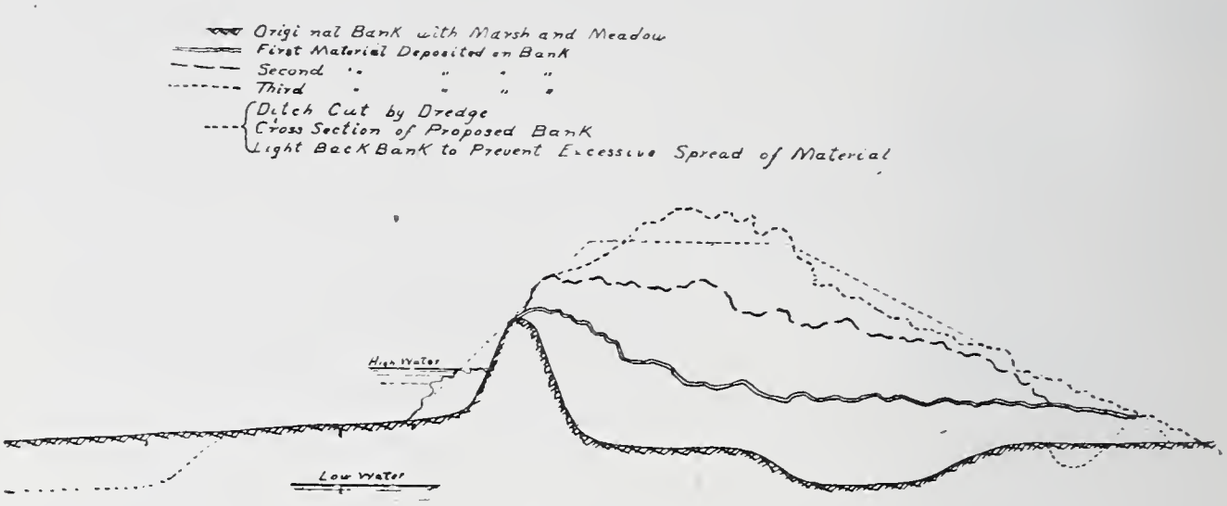

FIG. 2.

It requires great skill and years of experience to say just how much material a bank will stand, and it very often occurs that too much is piled in one place, and either the bank or the contractor (usually both) suffers in consequence. In building the bank the following problems must be solved:

1. To economically operate the dredge, enough material must be excavated to allow it to work at least five hours on each tide.

2. This material must be so placed as to prevent too much loss.

3. The weight of the material must be so distributed as to prevent caving of the old bank.

These three conditions are sometimes extremely difficult to harmonize, and one is, at times, sacrificed to the other. When impossible to reconcile cases 1 and 2, a compromise is effected. Case 3 is never com-

promised. When the weight of the deposited material becomes greater than the bearing power of the bank, it is the result of a mistake, ignorance, or want of judgment; all equally disastrous. There are three general methods in which these slips occur, viz.:

1. The material caving from the center of the old bank and sliding into the cut (Fig. 3): This is due either to the undermining of the bank (*i. e.*, digging too close or too deep in front) or the weight of material placed upon it. These slides are most difficult to guard against, as they rarely occur while the machine is actually in operation. The mud is thrown upon the bank at or about high water, and the bank usually stands while it has this pressure to hold it. When the tide falls and this pressure is withdrawn, the bank breaks. When such a slide occurs,

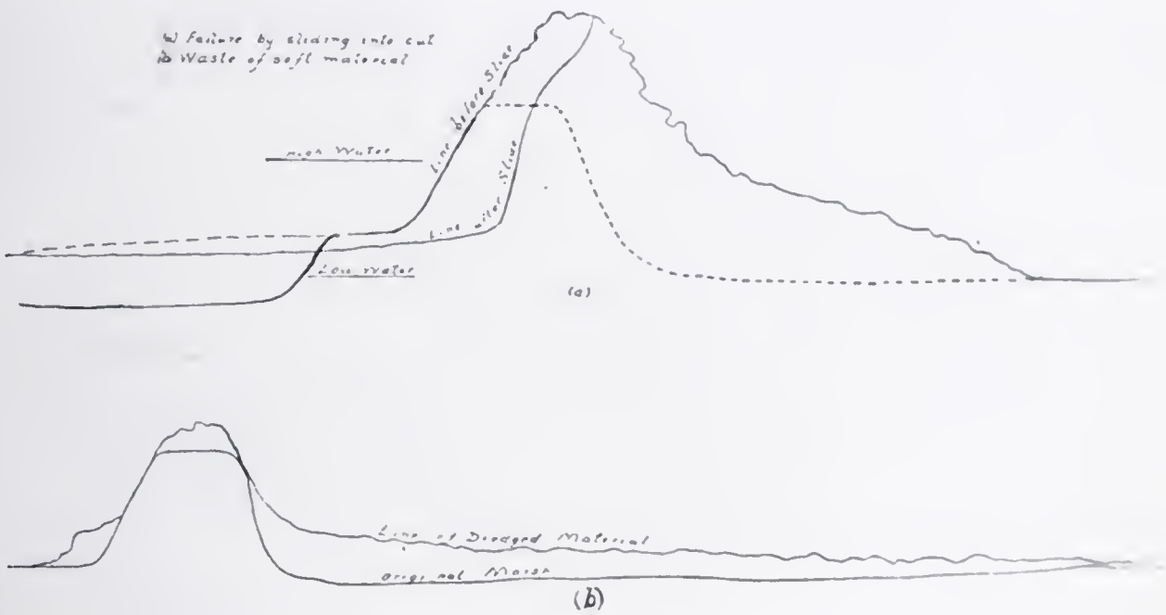

FIG. 3.

the place is left for a time; then material is placed on either side of the broken portion and it is carefully built up by hand, a slow and tedious process, but reasonably sure. Even then it is not finished at once, but first built above high water, if the bottom does not again commence to slip, and completed when the first material has become set.

2. The material sliding down the back of the bank and out into the meadow beyond the point where the line of the slope hits the meadow (Fig. 3): This in no way endangers the bank, but is of great expense to the contractor, the material being in addition to that provided for by the specifications, and hence not paid for. When these slips occur, the dredge has to make one more trip than would otherwise be necessary to complete the work.

3. The meadow is at times so soft that the material placed upon it settles down in places and pushes the original marsh into the dredged cut. This form of failure is, of all, the most difficult to deal with. The only way such material can be handled is to put a few buckets up at a time, and if more material must of necessity be excavated in order to economically operate the dredge, it must be cast upon the other side of the cut and not upon the site of the bank. At times, when a slide of this kind occurs, the bottom of the creek will rise enough to ground the dredge, which before the slip had ample water in which to float.

When banks are first built, it requires great skill to pile up the material in such a way as to insure its not slipping back into the cut. The first bucket of material is placed nearest the line of the cut, the bucket being allowed to drop hard into the marsh; thus part of the new material is buried in the marsh, which helps to keep this material from slipping (Fig. 4). The boom of the dredge, working practically in an arc of a circle, places each succeeding bucket of mud further around and back, until the limit of swing is reached, where as much material is placed as will stand. When the dredge moves ahead, the first bucket goes on the same line, and next to the first bucket dug on the preceding move. The latest material dug is the most slippery, and even the short time elapsing between moves suffices for the one bucket placed on the toe-line of the bank to become set, thus causing the material to slide away from, instead of toward, the cut. In very soft material this method is sometimes insufficient, and a false toe is placed, such as a log, with upright strips driven into the mud to prevent slipping. A small pile of stones is sometimes used in the same way; at times a mattress of brush, straw, or other material is made and mud deposited on top of it.

Referring to figure 4, the three letters represent the three moves of the dredge and the corresponding material placed on the bank at that move. It must be understood that only the first seven buckets dug are shown; usually about fourteen are put in place, the other seven as near to the position of bucket No. 7 in each move as possible, the material pushing back at this point to the foot of the bank. Nor will the material remain in the position shown, but will slide and mash down until it reaches the probable line of slide.

When all the material is placed upon the bank, it should be carefully faced and leveled on top, and it is a good practice to level the back face; the slopes most generally used are 1 : 1 for the face and 1 : 2 for the back, with various heights and widths on top. This leveling is shovel work, and should be commenced about three days after the material is cast

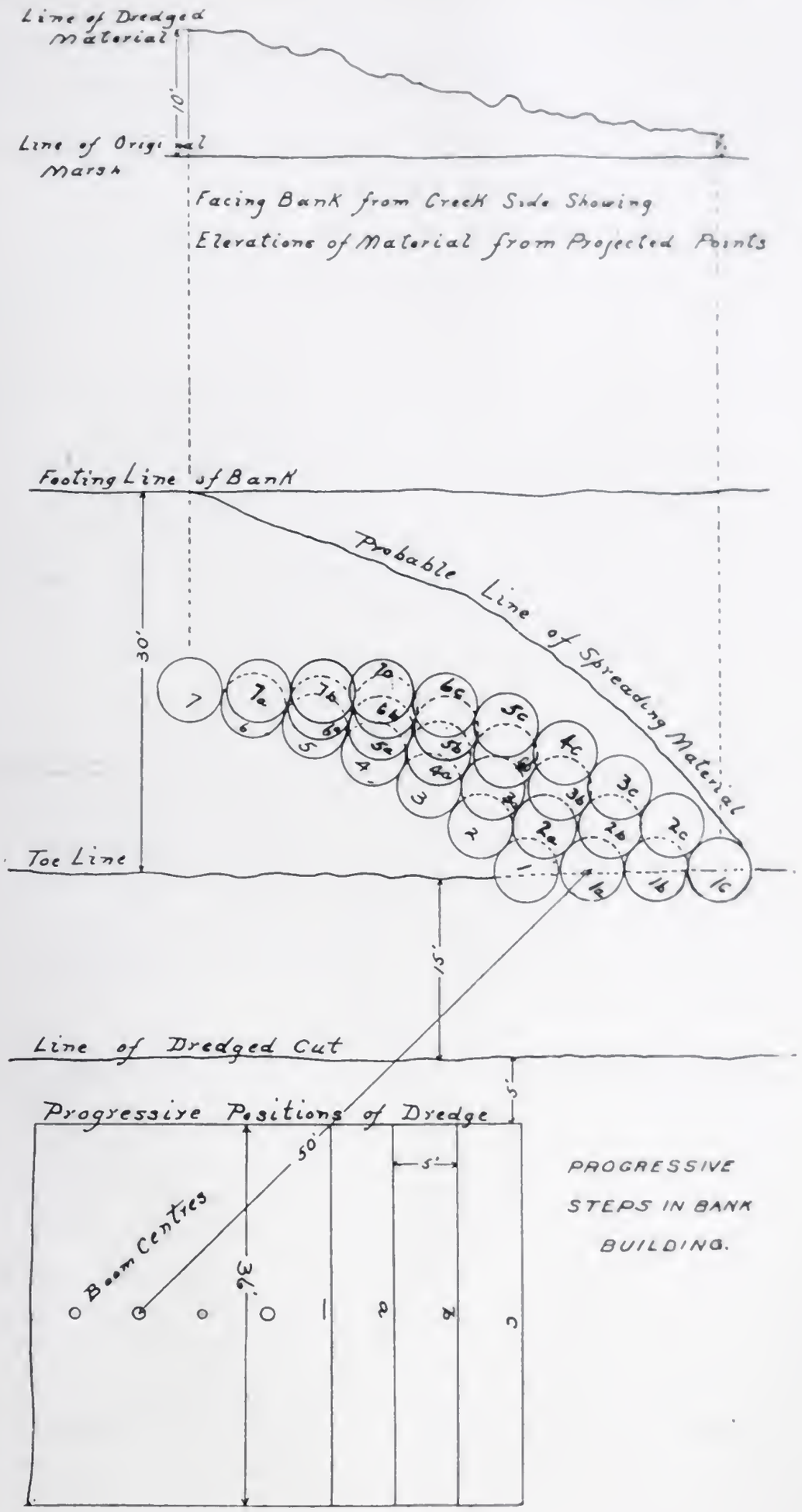
Line of Dredged Material
10'
Line of Original Marsh
Facing Bank from Creek Side Showing
Elevations of Material from Projected Points
Footing Line of Bank
Probable Line of Spreading Material
30'
Toe Line
15'
Line of Dredged Cut
5'
Progressive Positions of Dredge
50'
5'
Boom Centres
36'
PROGRESSIVE
STEPS IN BANK
BUILDING.

FIG. 4.

up by the dredge; this time suffices to allow the material to dry enough to give the men good footing and does not allow the material to become sun-baked and hard. Again, when the material is damp, it makes a much better bond with that next it, and forms, after several rains, a good hard bank. If too dry, it at times becomes necessary to use a pick, thus increasing the cost of leveling.

The best practice is then to sow the bank carefully with grass seed and to cultivate a sod; this prevents the mud from washing out at times of rain or freshet, or, in other words, forms a natural protection for the bank.

Another common practice is to plant willow trees along the foot of a bank, that their roots may form a natural protection and tend to hold the bank together. The advisability of this practice is questionable. While it is a protection to a certain extent, yet washouts occur along the roots of these trees, and if many are planted, it is absolutely impossible to cut out and repair musk-rat holes or washouts, owing to the millions of roots woven and interwoven throughout the bank.

The Closing of Breaches.—A breach usually occurs in the weakest place in the bank—viz., where there is little good material to be had and the bank is small, or where the material of which the bank is made is thoroughly unfitted for use, and these very conditions operate seriously against the stopping of them. The difficulty can be easily conceived when two hundred acres, more or less, are alternately covered with water and drained each change of tide. This water flowing through the breach produces a terrific current, which does not often wear the breach wide, but quite deep (usually to within five feet of the depth of the river-bed or to hard bottom).

These breaches must practically be stopped on one tide. Usually work is started just before low water, and the endeavor ismade to keep the bank above the tide as it rises. If the tide once gets over the bank, the whole of your mud is carried in on the meadow, your work is thrown away, and, as a rule, the breach is in worse condition than before. Again, you have wasted all the material put into it, and there usually being a scarcity, this is the most serious loss. Much more material is required in a breach than on an ordinary bank, because the "green" mud must stand, on one tide, the whole pressure of the water.

Very few breaches can be closed by a dredging machine alone. Several methods are in vogue at present, and experience alone can dictate the place in which any one system can be successfully used. In many

breaches several methods or a combination are tried before success rewards the work. The four methods mostly used are:

(1) Sand-bags; (2) Stone; (3) Sheet piling; (4) The use of wrecks.

1. This method is usually very successful. The bags, weighing from five to six hundred pounds each when filled, it is difficult for even the strongest tide to move them from place, and the sand, being confined, cannot wash away piecemeal. The bags are piled as nearly as possible in layers, alternating in direction. When the breach is once stopped, these bags are thoroughly covered with dredged material to avoid any possible escape of the material when the bags decay.

2. Stone is very successfully used in smaller breaches, and has the advantage of being quickly and easily handled. Two good-sized parallel walls are built and dredged material deposited between the two, the object of the stone being to keep the mud from slipping out at the bottom when weight is placed above. This is not successful in large breaches, and on several occasions, upon looking for an unfinished wall of stone after the worst of a tide was past, nothing has been found, the stone having been picked up by the tide and distributed over the meadow.

3. Pile work is least efficient of any method, and can be used to advantage only on the smallest breaches. Sand-bags and stone start at the bottom and build up, keeping about the same elevation across the breach; pile work starts at one end and gradually narrows the breach, and, the same volume of water trying to get through a small space, the end piles are undermined, the wood construction goes out, and the breach is deeper than before. Sometimes the water simply eats its way under the construction, deepening the breach and washing out the pile work. These modes of failure are absolutely impossible with the first two methods, while the third method rather courts than avoids them.

4. At times an old canal-boat or lighter is sunk in the breach. This is a very effective way of stopping it, as the lighter when filled with mud does not easily move from one place to another, nor does the mud wash out, being confined in a strong wooden structure like a coffer-dam.

At times breaches become of such dimensions that it is an almost hopeless task to start with one of the above methods. It often occurs that the deepest water is not on a line with the original bank, but inside of it, caused usually by use of material in efforts to stop the break by horseshoeing and progressively moving the material further back on the meadow (Fig. 5). The sketch shows a breach at first of rather small dimensions, becoming progressively larger and deeper owing to

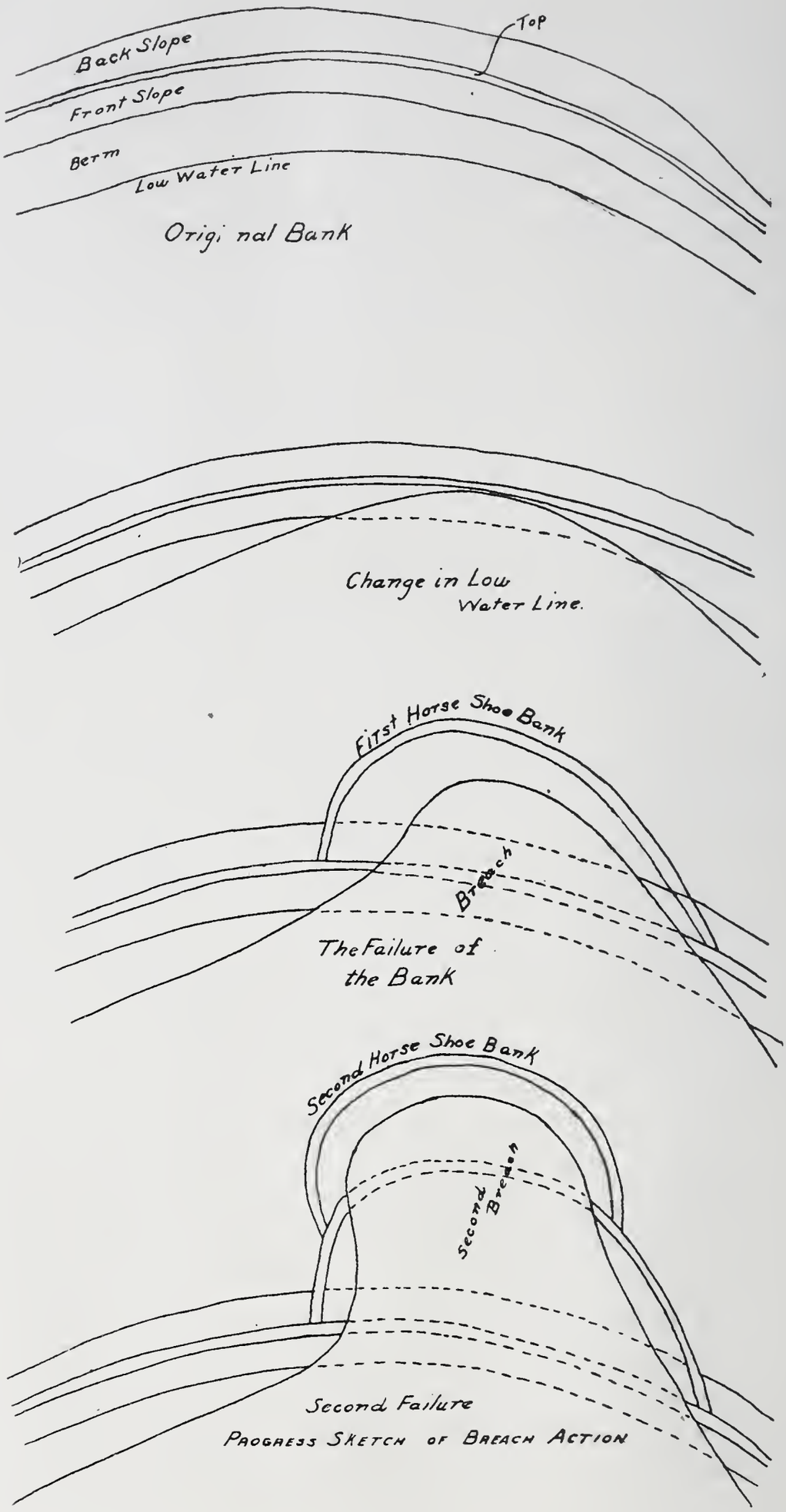
Back Slope
Top
Front Slope
Berm
Low Water Line
Original Bank
Change in Low Water Line.
First Horse Shoe Bank
Breach
The Failure of the Bank
Second Horse Shoe Bank
Second Breach
Second Failure
PROGRESS SKETCH OF BREACH ACTION

FIG. 5.

mishandling. In such a case the heaviest material available is put in scows, towed to the site of the work, and dumped in and around the break both in the meadow and the creek outside the line of bank. The endeavor is thus made to form a new bottom of hard material (coarse gravel is the best, sand being worthless); when this is accomplished, one of the above methods is resorted to and the breach closed.

It is rare that attempts at any of these four methods are made on a line with the original bank, but horseshoes are made, the inside bank going in far enough to avoid the rush of water through the breach. This is the surest and cheapest way; but when the water is shut off, the original bank should be restored and the horseshoe bank not depended

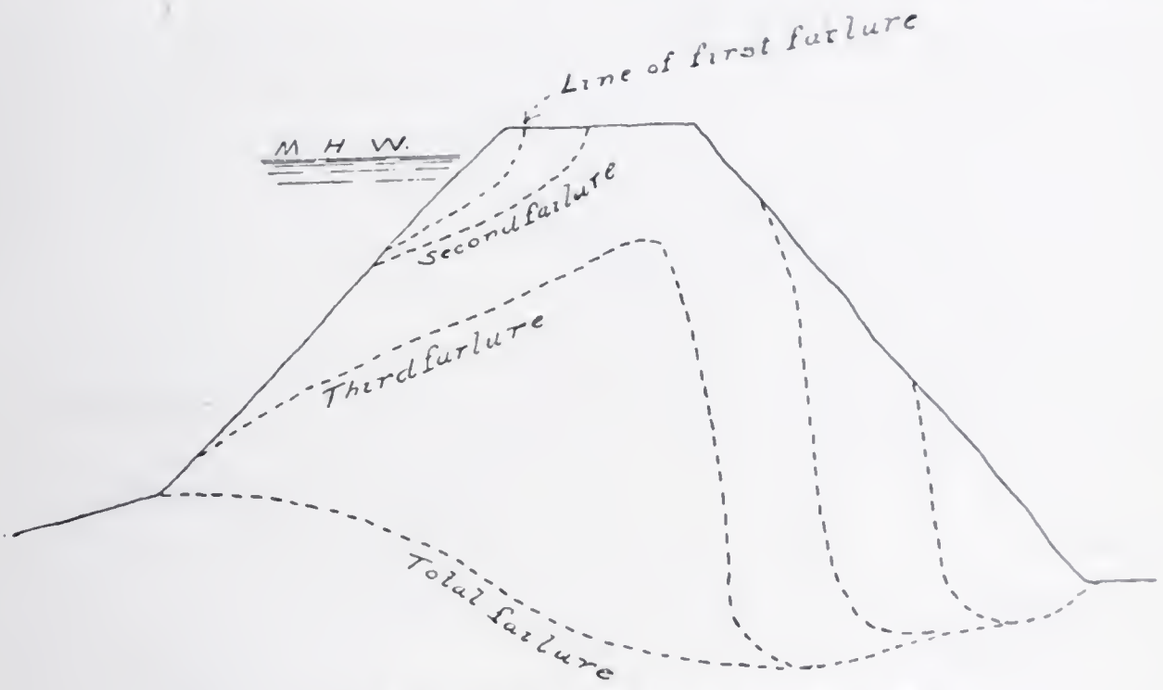

Fig. 6.—The Wearing of a Bank Due to High Tides.

upon. Unfortunately, this is very rarely done, the bank managers usually resting on their laurels as soon as the water is shut off; the result is that the next time the bank fails, you have to go further back into the meadow, thus cutting off more acreage as well as making a greater length of bank to care for. One breach near Philadelphia has seven horseshoe banks built, one behind the other; I might add, the breach is not stopped yet. The only way possible to stop this breach is to furnish, from an outside source, the material to fill the hole made by successive attempts to stop the breach. This material could easily be scowed in, and on the bottom thus formed the breach could be stopped by one of the methods above mentioned.

Failure.—If the face of a bank is kept in good condition and there is

an ample slope on the back, failure rarely or never occurs. The musk-rat holes should be dug out at least once a year and the hole packed with green mud. The face of a bank yields to the wearing action of the tides at about high-water mark, or a little below, a hollow being formed, and the earth above falls of its own weight, thus lessening the width on top (Fig. 6). The greatest wearing action, arising from the water flowing over the top of the bank, occurs in the back, and causes serious damage only when the back slope is very sharp; then the fall of the water washes away the bottom of the slope and wears the bank through very rapidly.

The tendency of a musk-rat hole is to loosen the material in the bank, and it is a well-known fact that the places where these holes abound wash first.

Selecting the Site of a Bank.—Naturally, in selecting a site the land-owner wishes as much land inclosed as possible, and the engineer conforms as nearly as is practicable to this idea. Again, nearly every farmer wants a "straight bank," *i. e.*, the same distance back from the creek throughout the entire length. This is a mistaken idea. A bank is built not only with the idea of shutting off the water, thus permitting the cultivation of the land, but the kind of a bank should be built to insure future cheapness in maintenance; such a site should be selected as will insure the future stability of the bank (Fig. 7).

A creek or river bends in and out, and along the same creek many different forms of bank and protection should rightfully be used. In the straight reaches, the bank should be about fifteen feet back from the low-water line, and will probably need no artificial protection. This applies equally well to the bank on the convex side of the creek. On the concave side, where the tide runs close under the bank, some marsh should be left; then the dredged cut made; then fifteen feet of marsh, and, finally, the bank. This leaves enough berm to protect the bank from any immediate wear. The ends of the dredged cut should be shut off when the bank is completed, in order to prevent the tide from flowing through the cut, and thus endangering the bank. In the straight reaches and on the concave side of turns the dredged cut fills very rapidly, a cut of five feet depth being practically obliterated in the course of five years. Even the distance of the bank back from the creek above mentioned does not necessarily insure the bank's safety, and usually some protection must be added.

Materials of Construction.—Before leaving this subject, it will be well to say a word as to the efficiency of various materials for bank building.

PROPOSED BANK SYSTEM FOR FLOODED MEADOW PROTECTION
SHOWING THEIR POSITION WITH AUXILARY
BANKS ETC.
Low Water Mark
Dredged Cut in
Meadow
Main Bank
a Auxilary Banks
a

Fig. 7.

As a rule, in creeks the materials available are mud, clay, sand, and gravel, and the material used usually depends upon that nearest the site of the work.

Mud: Good clean marsh mud is by far the best material of which to construct banks. It packs well, is comparatively easy to handle, gets a sod quickly, and, when dry, does not powder, but forms a well-cemented mass. It is also the lowest material in point of cost.

Clay: Clay is of some value for puddling, forming a most impenetrable mass, but is also subject to the washing effect of rains and tide. Used with mud as a protection, it forms a valuable adjunct; but alone, is of little value. The cost is also prohibitive in many cases, it costing three times as much to handle clay as mud.

Sand: Sand is of value when confined (in bags, as explained above); but alone, is the worst of materials. It washes rapidly, never forms a compact mass, and I have known pretty good-sized banks to literally blow away when the sand becomes dried out.

Gravel: Gravel is a fair material when dry; but when wet, is hard to handle. A small quantity of it getting into the bucket at one time, there is room for a large amount of water, and the gravel, when released, is immediately washed to the bottom of the bank. This is a serious drawback from the contractor's point of view, and about doubles the price of the work. Another objection is the weight, since it is possible to place only about half as much gravel as mud on a bank.

The objection to mud is the waste of material. From careful calculations made a few years ago, a conclusion was reached that the difference between bucket measurement and the mud in place on the bank, after drying, was fully fifty per cent.

Hand-laid Dry Stone Protection.

When there is a stretch of protecting marsh in front of the site of the bank, mud revetments without protection will answer, and are much cheaper; but where they are subject to the wearing action of the tides or to the wave action produced by heavy wind, they wash rapidly, and are alone of very little permanent value. This is sometimes partially prevented by laying stone on the face of the bank, which prevents washing for a time, but eventually the earth backing washes from behind the stone, the stone falling into the hole thus formed, and that above comes tumbling down to the bottom of the bank, leaving it without protection (Fig. 8).

Construction.—There is quite an art in laying stone successfully, and

it is difficult to get men who can satisfactorily perform the work. After a part of the mud is in place, usually a little above high water, the bank is shaped with shovels, being packed hard on the face. Nothing but carefully selected mud should be used and no pains spared to obtain it. Sand is worse than useless, and mud with even a small percentage of sand makes a poor backing for the stone.

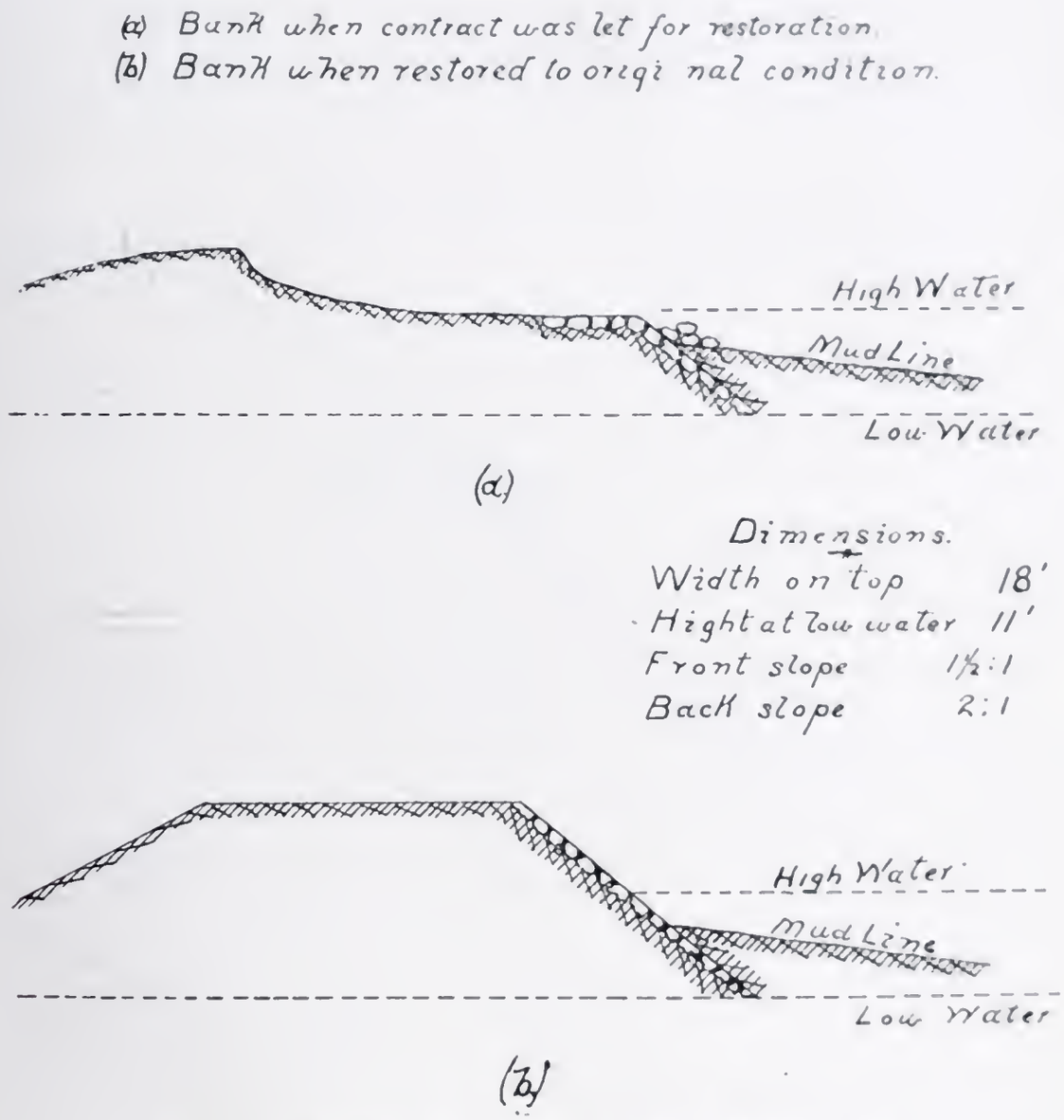

FIG. 8.—CROSS-SECTIONS OF BANK AT FORT MIFFLIN, PA.

Before the material is dry and hard the stone is laid. Often a log or square timber is placed about twelve inches in advance of the toe of the bank and the first course of stone laid inside of it (Fig. 9); this prevents the sliding out of the stone at the bottom. Lines are placed, to which the stone is to be laid, the stone being placed with the greatest width in a horizontal position. The lines should be so arranged that the stones,

to reach the proper slope, must be pressed two or three inches into the backing.

A course of stone is laid, then all the interstices are carefully filled with chips of stone ("spalls"). This is a most important detail, and should never be neglected, it being best to drive these chips in hard with stone hammers to insure good contact. The next course is then laid and the operation repeated.

The stone is usually piled in front of the bank, the lower courses being laid at low water. There should always be two sections of the bank under construction at once: one which will put the mason above high

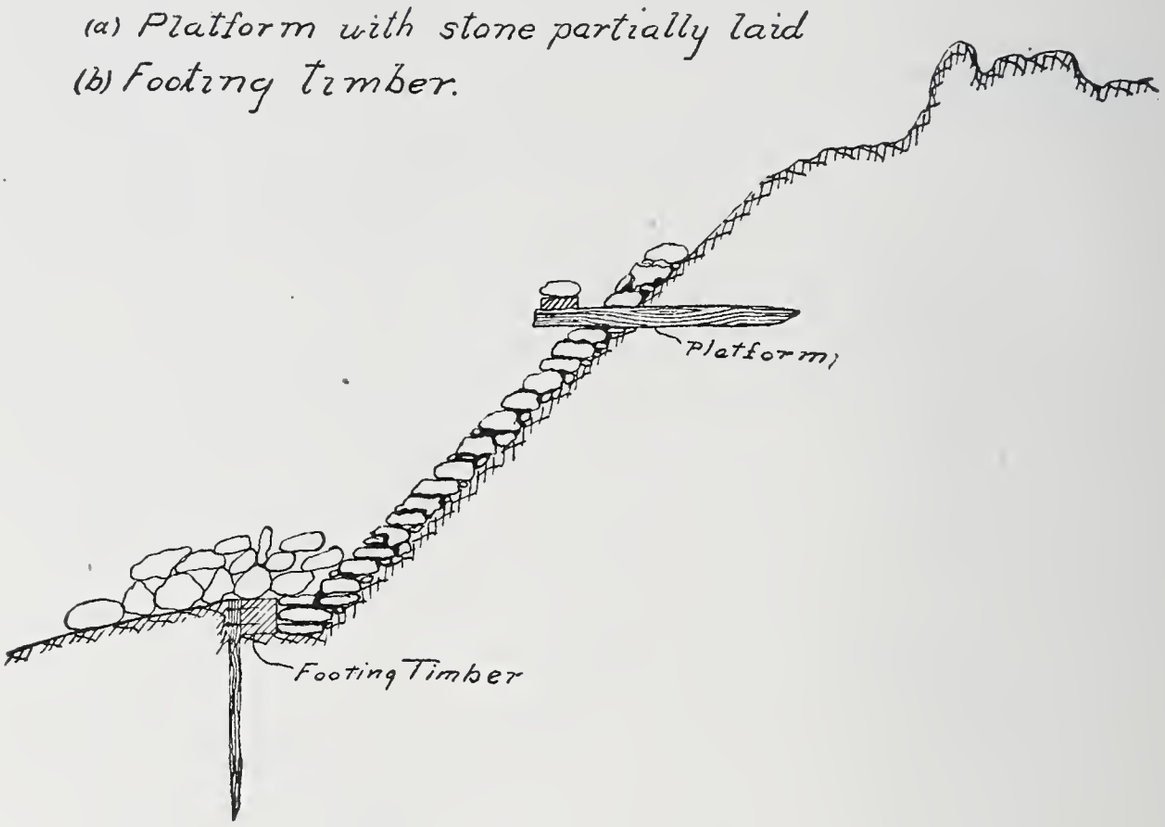

Fig. 9.

water when high water comes; the other to permit him to avail himself of low water in placing his bottom courses.

Two men work together—a mason, who lays the stone, and a helper, who selects and passes the stone up to him from the pile below. On the high tide, the helper is often up to his waist in water.

Little wooden platforms are erected at various heights on the face of the bank, and are used to store stone and also for the masons to stand upon while laying the upper courses (Fig. 9). These are not removed until the work is completed, and then the holes left in the wall are carefully filled with stone.

The usually accepted slope for these walls is 1 : 1. It has been found that at this slope the stone is neither displaced by tidal action, nor does it tend, by its own weight, to bury itself into the mud backing.

Heavy Dry Wall.—At times a heavier "dry wall" is laid, of several thicknesses of stone, and on a variety of foundations, but always with the same result eventually—namely, the washing of material from behind the wall and the falling of the wall itself.

These walls are five or six feet on the bottom with a width of about two feet on top, and are sometimes laid with a batter on the front, although usually built straight. They are really a waste of material, being very little better than a single layer of stone, and using probably more stone than a wall laid in cement. The best of these are put on a light, three-pile foundation, with flooring under the wall only and without sheeting.

Timber Protection.

The idea of timber protection is almost as old as that of the mud bank itself. Timber being plentiful, it has generally been used.

These crib formations are a good protection, and may be made very substantial. They are, however, liable to decay, particularly the portions between low and high water, the natural life of such a structure being about five years. Then repairs must be made, and the cost of such repairs is in proportion to the stability of the original structure: the better the original, the greater the cost of repairs.

The oldest method in existence is the piling of cord wood perpendicular to the length of the bank, and in front of it (Fig. 10). The pieces are usually ten feet in length and about four inches in diameter. They are laid to within two or three inches of the top of the bank, the ends being firmly driven into the bank, as good a bond as possible being effected beween the bank and the wood. In order to prevent the sticks rolling, they are piled in sections, very much like ordinary cord wood. A solid row of vertical pieces is driven into the marsh perpendicular to the length of the bank, another similar row being driven parallel to them at a distance of about fifteen feet. The space between is then filled with the horizontal logs, the vertical row keeping the horizontal ones in position.

At first glance one would say that this construction was of little or no avail, the speedy decay of the wood and the washing of the water, which will certainly penetrate to the bank, probably effecting a speedy disappearance of the protection. This is not the case. Upon examining one of these protections which had been in place for twenty years,

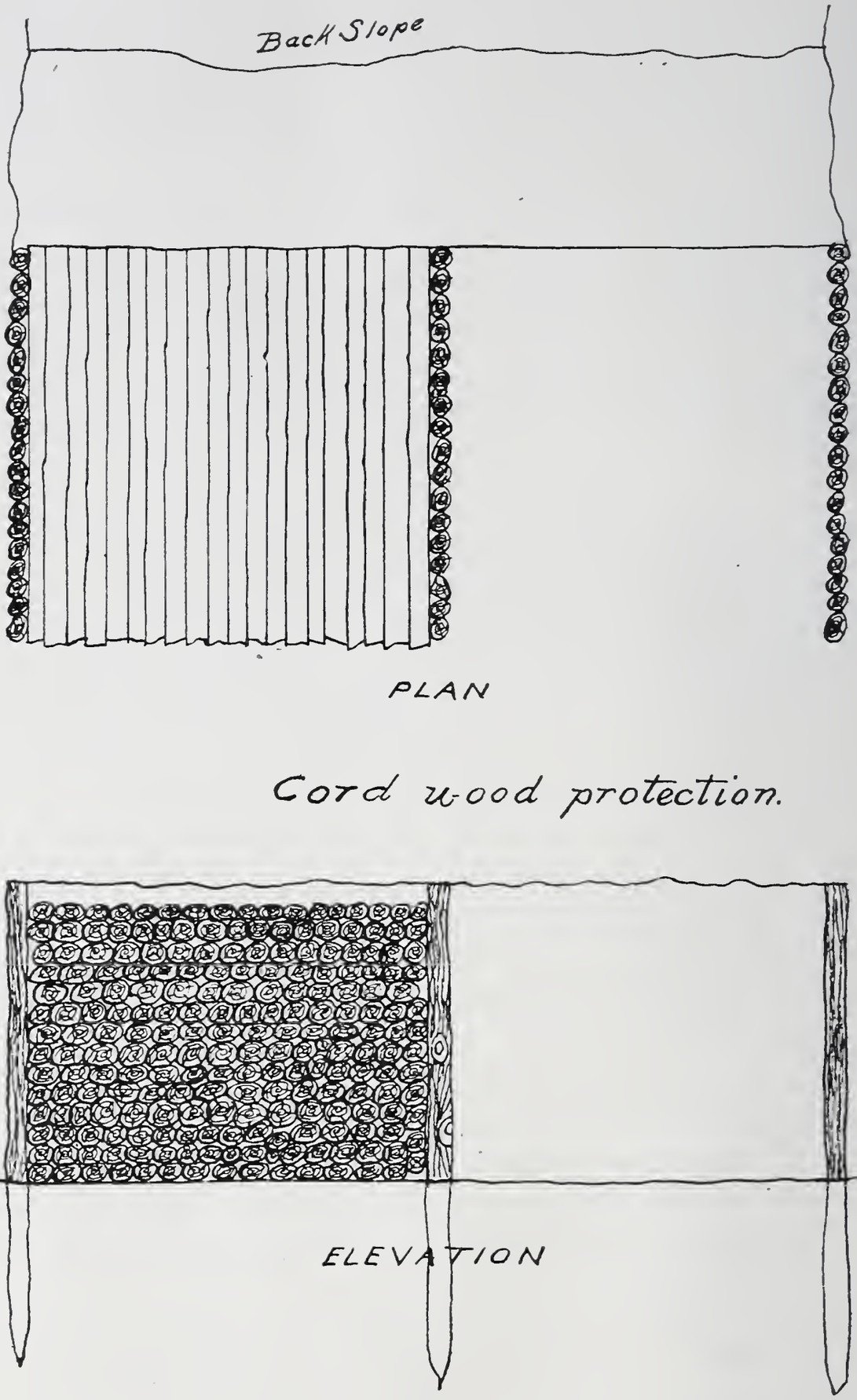

Fig. 10.

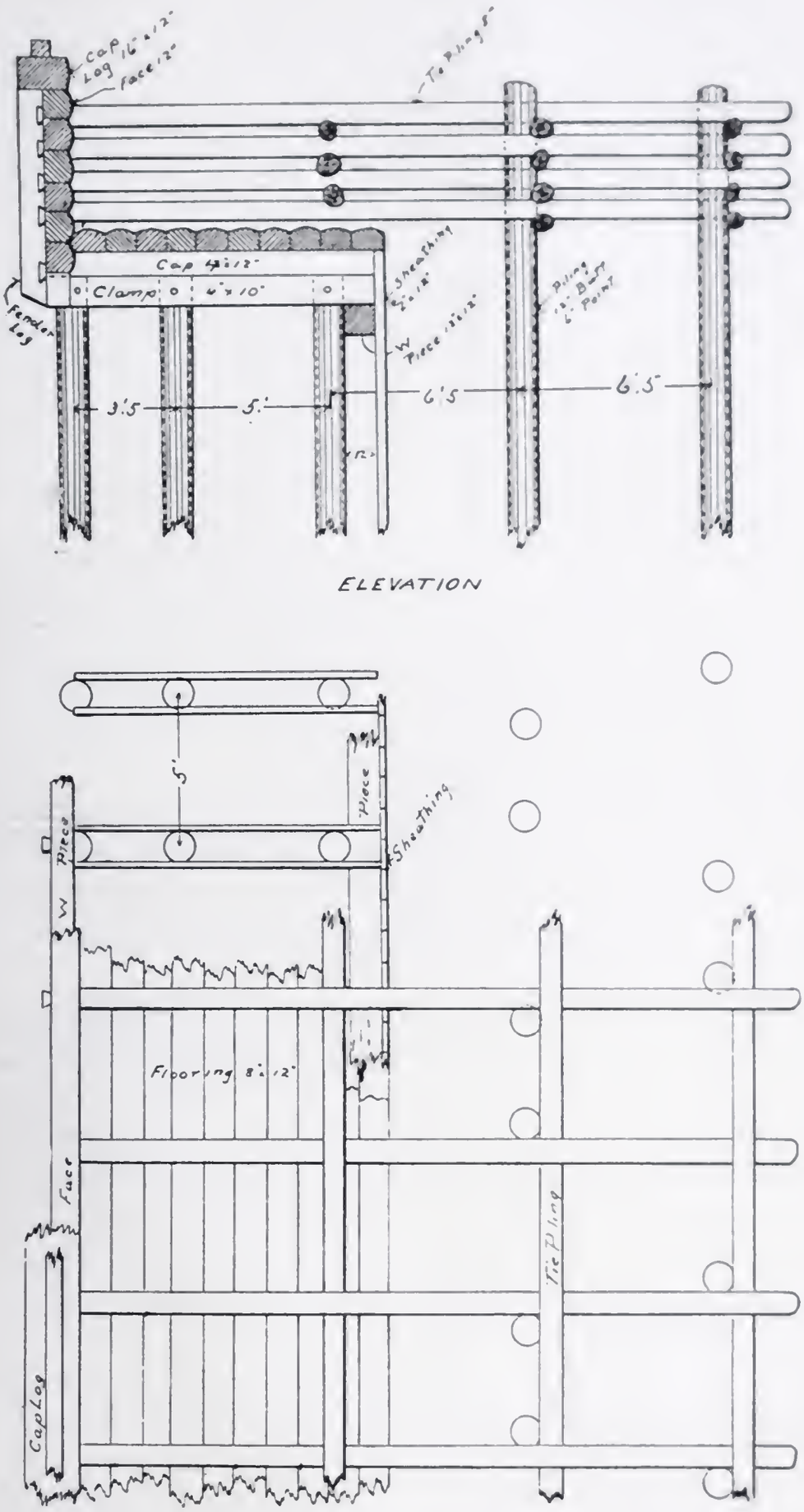

Fig. 11.—Bulkhead Protection.

it was found to be in apparently good condition. The wood for about a foot, at an elevation corresponding to three feet above low water, was pretty badly decayed, but had formed a layer of dirt which at that point made the bank really ten feet wider than the bank proper. Otherwise the bank was intact, and apparently in as good condition as ever. Earth is at times piled on top of the protection to help keep the logs in place.

A protection very generally used on small banks is the driving of upright sheet piling. These, if driven without guides on top and at low water, and also if they are not plowed and grooved, are of very little value, the filling washing from between the openings in the board. A heavy log is fitted with handles, and, several men raising it, it is allowed to fall on the head of the timber and drive it to place—a very tedious and expensive operation.

A method of protection used extensively in the creeks of New Jersey is that of a row of cedar poles driven in the marsh about twenty feet in front of the bank, being about four inches in diameter and twelve inches c. to c. These poles break the waves caused by wind, which are likely to erode the bank, and render the water coming in contact with the bank quite smooth.

This brings us to the more elaborate forms of protection which end in bulkheads. It is not my purpose to go into bulkhead work, although this is but another form of bank protection. I will, however, give a sketch of an excellent form of protection, practically a wharf, which is very generally used (Fig. 11).

Description of Design.—Piles are driven for a foundation, the first three being sawed off ten inches above low water, and two clamp pieces $4'' \times 10'' - 10'$ placed on either side of them. Above this is placed a cap-piece, $4'' \times 12'' - 10'$, extending over the first three piles. To this cap the flooring is spiked, running parallel to the bulkhead. At the inside end of the clamps and cap-pieces the sheet piling is driven. This piling should in every instance be driven to a firm bearing, so that, no matter what the wash or strain upon it, there would be no danger of shoving out at the bottom.

Two other rows of piling are placed back of the first three, and are sawed off to a level a few inches below the top of the bulkhead. These are called tie piles, to which are fastened the tie rods running through notches in the bulkhead. These piles are on the same line longitudinally, but are alternately first on one side of the tie rods and then on the other. The rods are saddled—*i. e.*, rounded out to fit the piles

snugly. The position of the piles assures a straight rod, and, when bolted through and through, they form a construction which should never give. In addition to this, longitudinal piles are laid between the rods and behind the tie piles, being bolted securely to both. The bulkhead itself is built of twelve-inch stuff, faced on three sides, rough in back, each course being drift-bolted securely to the course below, in addition to which the ends of the tie rods are securely bolted to the bulkhead timber. It will be noticed that the tie rods are placed between two bulkhead pieces, thus cutting away only a little of each piece of timber and saving its strength.

Concrete Wall.

The building of a wall, either one of concrete or of stone laid in cement, furnishes by far the most efficient and permanent protection.

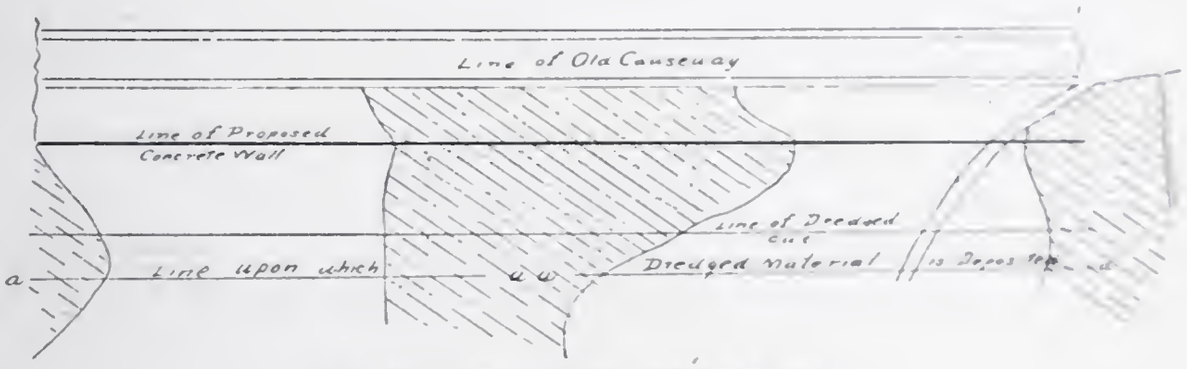

Fig. 12.—Position of Concrete Wall.

Rather than generalize on the subject of these protections, I have chosen two examples, which I had the opportunity of watching during construction.

General Description.—The wall is situated at one end of a great fresh-water reserve basin, under construction at the present time, and is of concrete and on a pile foundation. It is parallel to and thirty-nine feet from the line of an old causeway, which was protected by crib work. In designing the wall, the following contingencies had to be met and overcome:

1. In order to place the wood construction below the plane of mean low water, and also to permit the pile-driver to work at all stages of the tide, it became necessary to remove, to a depth of about seven feet, the mud from the site of the work (Fig. 12).

2. At a distance of fifty feet from the face of the wall there was to be made a depth of twenty-five feet at mean low water, making a slope of

2 on 1 in front of the wall. The piles, therefore, must be brought to such a depth as to make the foundation safe against sliding when the material was removed from in front.

3. The open space between the new wall and the old causeway was to be filled with dredged material; therefore the foundation as well as the wall had to be designed to bear the great thrust of this material.

Details of Design and Construction.—In all permanent constructions exposed to tidal action the wooden portions of the structure must be below, or very nearly at the plane of, mean low water; and when thus placed, are as good as any other known construction and much cheaper than some. The material was excavated to a depth of two feet at mean low water by means of a grapple dredge with a seventy-foot boom, being thrown over along the line of the cut and also at one end. The cut was made one hundred feet in width to allow: (*a*) A slope of two on one to prevent the material from caving into the cut; and (*b*) for the construction of the foundation and a width sufficient to allow the pile-driver to drive the first line of piles under the wall, head on.

Upon the completion of this work, the engineer expected to use the banks thus formed as a coffer-dam, putting sheet piling across one end, and with pumping plant keep the level of the water inside the dam below the level of the pile heads, thus enabling the work of placing the clamps and flooring to proceed without tidal interruption. This idea was finally abandoned, owing (1) to the extreme softness of part of the material excavated, it being thoroughly unfit for the contemplated use; (2) to the expense of moving the pumping plant to the site of the work, and maintaining the same; and (3) to the leakage of the old causeway, the water having cut channels through the filling of the crib until with every tide water flowed through in streams, with little or no opposition.

Difficulties Overcome.

1. It was difficult to keep the material cast up in place, owing to its softness, and also the large amount of material to be excavated (twenty yards per running foot of cut), all of which had to be placed on one side. Several slips occurred, the material breaking away from the center of the bank and sliding back into the cut. When a slide of this kind occurred, it was left until the last, when on one high water it was thrown behind that material originally excavated and no more trouble was experienced.

2. In order to drive the piles to a sufficient depth to insure the proper

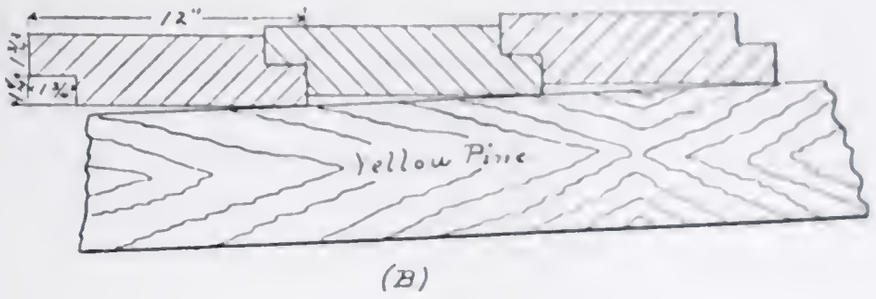

(B)

(C)

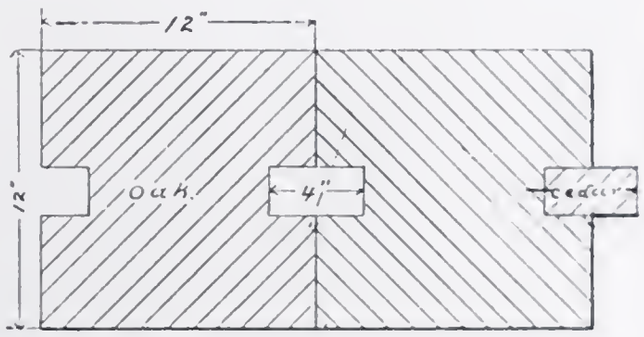

(A)

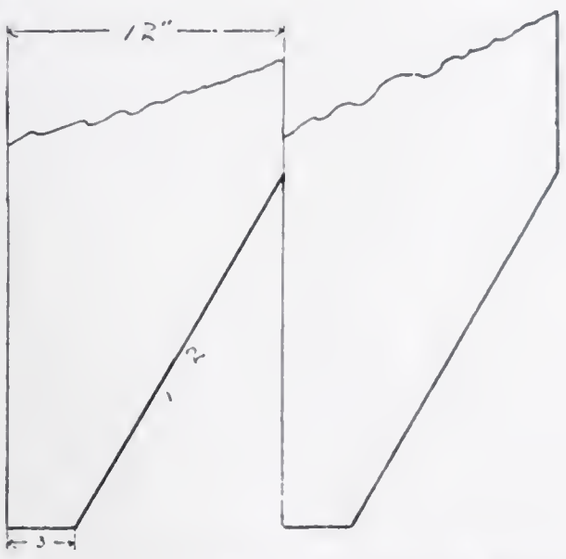

FIG. 13.—CROSS-SECTIONS OF SHEET PILING.

stability against the foundations' sliding, seven feet of hard gravel were to be driven through, besides the mud. Borings made by means of a jet showed mud to fifteen feet; a thin layer of sand, with gravel below to a depth of thirty feet, the depth to which the borings were taken. The piles were supposedly driven to a depth of about twenty-two feet mean low water. An ordinary pile-driver with a drop-hammer was used, the weight of the hammer being twenty-seven hundred pounds. The piles were unshod and driven unpointed. Judging from the condition of some piles driven on a later contract near the site of the work, and drawn, there is no doubt that the ends were very badly "broomed" for a distance of at least three feet. This, however, did not endanger the bearing power, as there is more than enough to support the weight of the wall and filling. The piles were of yellow pine, thirty feet long, not less than twelve inches in diameter four feet below the top, and six inches at butt without the bark.

Construction of Foundations.—The piles were driven with a wrought-iron band, each pile being sawed off fair at a height of eighteen inches above mean low water and the bands driven one and a half inches below the top. On top of the piles, and securely spiked to them, were cap-pieces $12'' \times 12''$, extending the entire width of the foundation. On these caps the flooring was laid entirely over the foundation structure, $4'' \times 12''$ yellow pine being used, and securely spiked to the caps. Before this flooring was put in place, the space between the piles was filled with dredged material up to the level of the top of the caps, the idea being to prevent the washing out of the fill through any possible holes in the floor. The sheet piling was placed at the back of the foundation, and was of three kinds (Fig. 13).

(*A*) The strips for the ploughed part were first put in on one pile and nailed securely in place, the next piece of sheeting being then driven. The piles themselves were $12'' \times 12''$ with a two-inch groove, the strips being of cedar, which when wet swells, insuring a tight joint.

B and *C* are both yellow pine. Of the three kinds, *C* is the least expensive, but not so effective as *A*.

Stone Wall.

Owing to the low elevation of the ground in front of an old bank, it was decided to construct a stone protection wall about one hundred feet in front of it, filling in the space between the dredged material taken from in front of the wall, thus reclaiming the land.

If the stability of the wall was calculated to withstand the thrust of

this material, serious mistakes were made, as the wall is a miserable failure. A depth of about five feet of material was excavated from the site of the wall to allow the sawing off of the piles at the proper height and the subsequent placing of the clamps and flooring. The ditch was made wide enough to permit the pile-driver to operate "end on the wall at all stages of the tide." As much material as possible was thrown on the inside of the line of the wall, the remainder of the material being placed on the outside line of the ditch.

The piles were then driven and caps placed, the sheeting being left until the last. The caps and flooring were placed at low water, and then the stone laid in cement, the various courses being laid alternately at high and low water. Finally, the space behind the wall was filled in with material dredged from the front.

Details of Design.—The foundation consisted of three rows of piles, three feet center to center and ten feet center to center respectively. The tops of the piles were trimmed away, leaving only four inches width of the original head, allowing the clamps to fit neatly, the back or so-called row of tie piles being treated in the same way. This was a mistake in the design, as it left only four inches of wood where there should have been ten inches, thus very much weakening the construction. The sheeting consisted of two-inch hemlock, and was placed on the outside with only a $3'' \times 6''$ wale-piece to hold it in place. This wale-piece was spiked to a pile every five feet, and was supposed to be spiked to every piece of sheeting. When the spikes were tried, it was found that they split the hemlock sheeting, and it being too expensive for the contractor to bore proper holes to receive the spikes, this part of the operation was omitted (without the knowledge or consent of the parties having the work done). The contractor at once realized that the sheeting with no fastening was practically useless, and thoughtfully substituted three-foot lengths instead of fifteen, as called for in the plans. There being some doubt as to the low-water line (in the mind of the contractor), the piles, instead of being sawed off ten inches above low water, were sawed off eighteen inches above. This gained him sixteen inches of tide in which to place his clamps, floor, and lower courses of stone, and also saved him 2.66 cubic feet of masonry for every running foot of wall.

The flooring was placed as the specifications directed, and the wall was built nearly in accordance with them. The stone was of the specified size.

Upon the completion of the wall, material for filling was placed in-

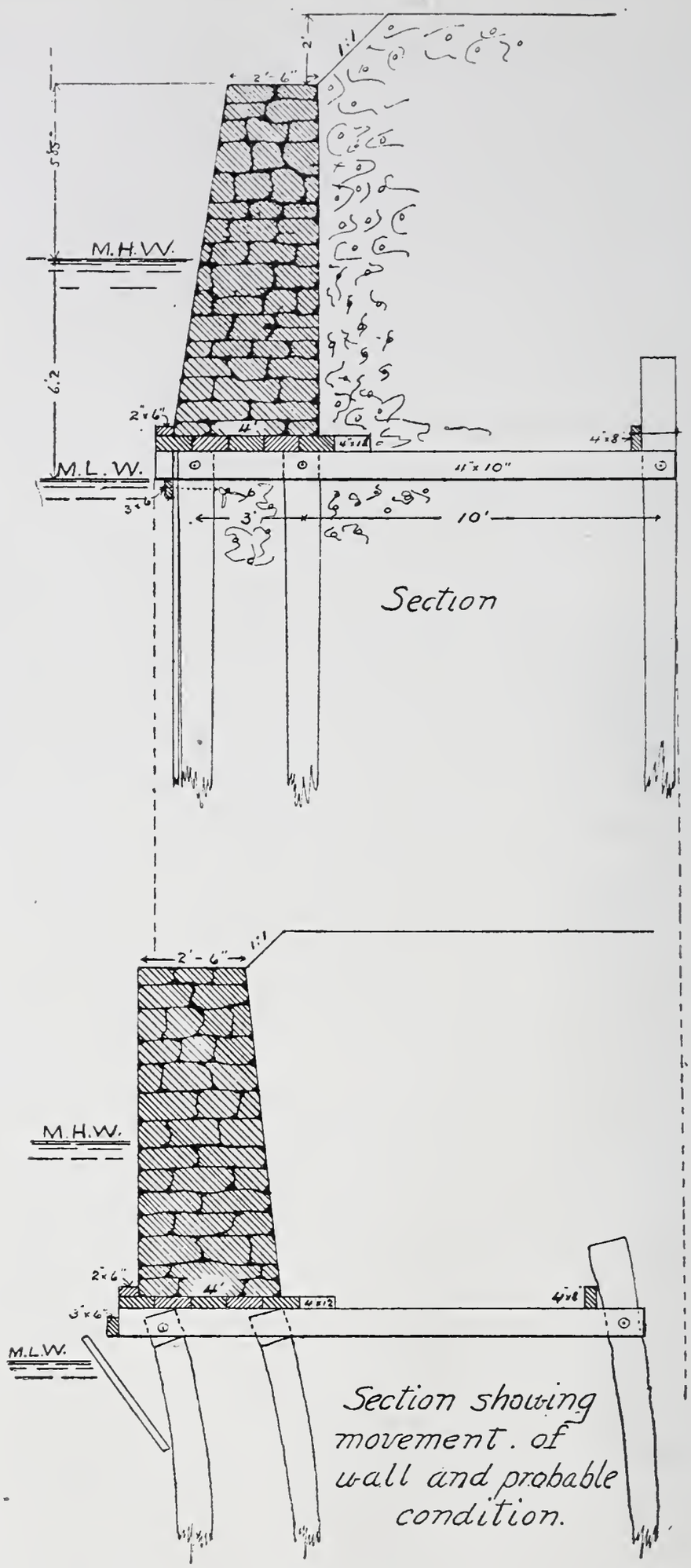
2'
1:1
2'-6"
5'5"
M.H.W.
6'2
2"x6"
4'
4"x12
4"x8
M.L.W.
4"x10"
3"x6
3'
10'
Section
2'-6"
1:1
M.H.W.
2"x6"
4'
4"x12
4"x8
3"x6"
M.L.W.
Section showing movement. of wall and probable condition.

Fig. 14.

side, and, although very little was put in at one time, the sheeting promptly pushed out at the bottom, being finally left in the shape shown in figure 14; and as the filling was continued, the whole structure, foundations and all, moved to meet the sheeting until the condition of the wall is about as shown.

The wall was accepted, the failure being attributed to weakness of design.

Duties of the Engineer.—The duties of an engineer employed upon this class of work being somewhat analogous in all the above works, I have left till the last a description of these duties, and shall consider all the sections under one head.

On mud revetment work an engineer is very rarely employed, one of the bank managers, a farmer usually, being given charge of the work. As he has to look after his farm and the bank at the same time, the bank is usually left to the supervision of the contractor, and finally accepted as a whole upon completion. This is really a much better way than at first thought it would seem. The grade and width on top with slopes may be very nearly judged by any one at all familiar with bank work. The other most important points in bank building—viz., to leave enough "berm" between the cut and foot of bank, and not to pile more material on the meadow than it will bear without breaking—may be safely left to the contractor. The sliding in of the piled-up material due to either of the above causes is so disastrous to the contractor that, for his own protection, he will give these points careful attention. Again, from his experience he will be much better able to judge the bearing power of the meadow, and the proper amount of berm to be left.

If stone protection is to be used, careful supervision should be given to the laying of the stone. Speed is requisite to the profit of the contractor; and the greater the speed, the more careless the placing of the stone. A good firm backing should be insisted upon, the stones to be pressed into this three or four inches. Each course of stone should have a firm bearing upon the course below. The line of batter should be carefully carried out, for, as explained above, on this depends to a great extent the lasting quality of the wall.

In bulkhead protection the services of an engineer are almost indispensable. All the timber and iron work should be carefully inspected. The lines for driving the piles and the elevation at which they should be cut off should be given by the engineer, and permanently marked to enable reference at any moment. Finally, a careful supervision should

be given to the actual work, and the following points watched with great care, for therein the contractor generally faileth:

1. Careful record should be kept of the material used in the construction, to make impossible the substitution of other for that inspected. This should include a careful list of all material brought upon the site of the work by the contractor.

2. Care should be taken that the piles be cut off at the required height.

3. Every precaution should be taken to insure the driving of the specified length of sheeting.

4. The fastenings, whether bolts or spikes, should be inspected when in place, and under no circumstances should work be allowed to be covered up until inspected.

The above points apply equally well to concrete and stone wall protection, except that in these cases is added the careful inspection of the mixing of the cement or concrete, as the case may be, and the testing of them.

In my opinion, the most reputable contractors need as much supervision as those of unknown honesty. Workmen are prone to fall into the easiest methods of accomplishing the work, and often, entirely without the sanction or knowledge of the contractor, perform the work in ways far from those specified in the agreement and plans.

The highest duty of an engineer is to exact justice, not only from the contractor, but for the contractor. He is a middle-man, and should use his best judgment in interpreting and carrying out the specifications. Often the engineer is too narrow to do anything but nag and in every way annoy the contractor, thus, instead of assisting and working with him, really retarding the work; in the mean time incurring the dislike of the contractor, who then tries to hoodwink him at every turn.

The above points are only a very few of the engineer's duties, but loom up in the practical end of the work. They will apply almost equally well to any kind of construction work, although every piece of work is surrounded by local conditions, which may change in every way not only the duties of the engineer, but the kind of construction and the methods of performing the work.

DISCUSSION.

L. Y. Schermerhorn.—That there is science even in building mud banks is exemplified by Mr. Wilson's paper. Observation and experience indicate that

skilled men can accomplish very difficult tasks of bank building, while the work of unskilled men frequently results in failure. The difference mainly arises from an erroneous estimate of the action and effect of partially fluid mud when placed in an embankment.

Few wharf builders appreciate the enormous thrust which arises from mud filling in a wharf, or revetment; and they therefore frequently make inadequate provision for the resulting pressures. Consequently when a dredging company is called upon to fill with dredged material such a construction, it is generally undertaken with the explicit agreement that, while reasonable care will be exercised, no guarantee is given as to the stability of the structure to resist the mud filling.

In calculating the required stability of a structure to resist the thrust of mud, it should be assumed that the resulting pressure will be equal to that which arises from a *fluid* with the specific gravity of soft mud: say a weight of from 100 to 110 pounds per cubic foot. To assume that the pressure will only be equal to that which would result from ordinary earth against the back of a retaining wall will lead to disaster. In several cases I have seen structures which would have safely resisted the pressure of sand, destroyed by the pressure of mud filling or gravel filling, even though it had been carried to a height of two or three times that of the mud.

Percy H. Wilson.—In speaking of footing-ditches, I refer only to those ditches immediately behind the bank. In order to do away with these ditches, and still drain the meadow, ditches are dug one or two hundred feet back of the bank, running parallel to it. These ditches empty into one running in a perpendicular direction to the bank, which ditch eventually discharges through a sluice into the river. These sluices are a constant source of annoyance, the musk-rats at these points going through the banks, and the city has, in several places, notably at Swanson Street, erected elaborate constructions to lessen the danger of washout at these points.

SOME UNUSUAL LOCOMOTIVES.

A. B. EDDOWES.

Read October 5, 1901.

The types of locomotives selected for consideration in the following descriptions were chosen as being of more engineering interest than the more widely known standard or usual types, which are in general use on all our large railroads, and with which every one is more or less familiar.

I must acknowledge the obligation to Messrs. Burnham, Williams & Co. for their courtesy in permitting the use of the necessary data and photographs from which these descriptions were obtained.

About twenty-five years ago there was, coincident with the growth of our large cities and the expansion of suburbs in every direction, a demand for better and swifter urban and suburban means of transporting passengers than was afforded by the then existing horse-drawn tramway cars that were in general use at that period. This demand had been met in a few cases, as in New York city, by the construction and operation of elevated railroads, but in many localities where the population was not so dense and the area to be served did not present the favorable geographic conditions that existed in New York, elevated railroads were out of the question; and so the effort was made to provide steam locomotives of the noiseless, inclosed type that would give satisfactory service through crowded city streets. The degree of success attained varied somewhat with local conditions, but, on the whole, the steam motor did not prove to be the best solution of the problem in the large cities, although for suburban service, where trips at infrequent intervals were all that was required, the motor train did excellent work in many places. An example of the kind referred to was the trains from Atlantic City to Longport, with which, no doubt, many are familiar.

A peculiarly interesting example of motor for this character of service is the subject of the first description, which was the first one of six motors built for the government of New South Wales for use on the tram-

way of Sydney. These engines are also of interest as being, probably, the first compound locomotives in successful commercial service.

These engines were designed by Mr. Downes, an engineer of the N. S. W. tramways. The details were worked out and the engines built by the Baldwin Locomotive Works during 1883. This design provided for a long car carried on the motor frame at the front end, and on a

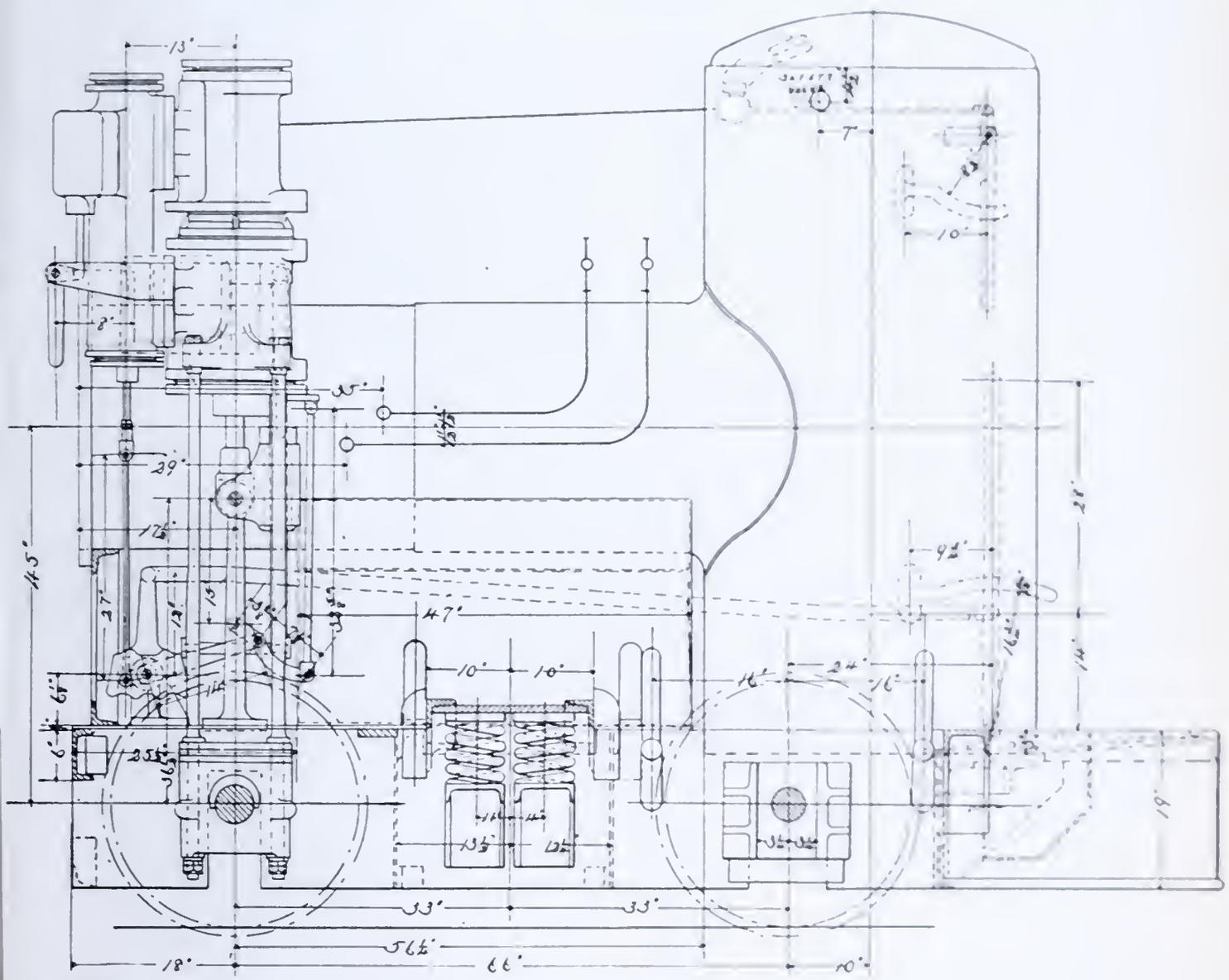

FIG. 1.—COMPOUND MOTOR.

truck of the usual type at the rear end. The front end of the car was made in sections, hinged, so that the end could be swung open and the motor readily run out when required for the purpose of adjustment or repairs.

The motor was carried on four wheels, 30″ in diameter, all of which were used as drivers; wheel base, 5′ 6″. The boiler was of the "Bury"

type, with a horizontal barrel 29⅛″ in diameter and a vertical barrel or furnace casing 39″ in diameter, with a furnace 33″ inside diameter × 59¼″ deep, giving a grate surface of 5.9 square feet. The boiler contained 113 tubes, 1½″ diameter, 5′ 4¼″ long, of brass, while the fire-box was made of copper ½″ thick, tube sheet ¾″ thick. Heating surface, tubes, 237.0 square feet; heating surface, furnace, 43.8 square feet; heating surface, total, 280.8 square feet—a ratio of heating to grate surface of 47.6 : 1. The engines are of the vertical compound tandem

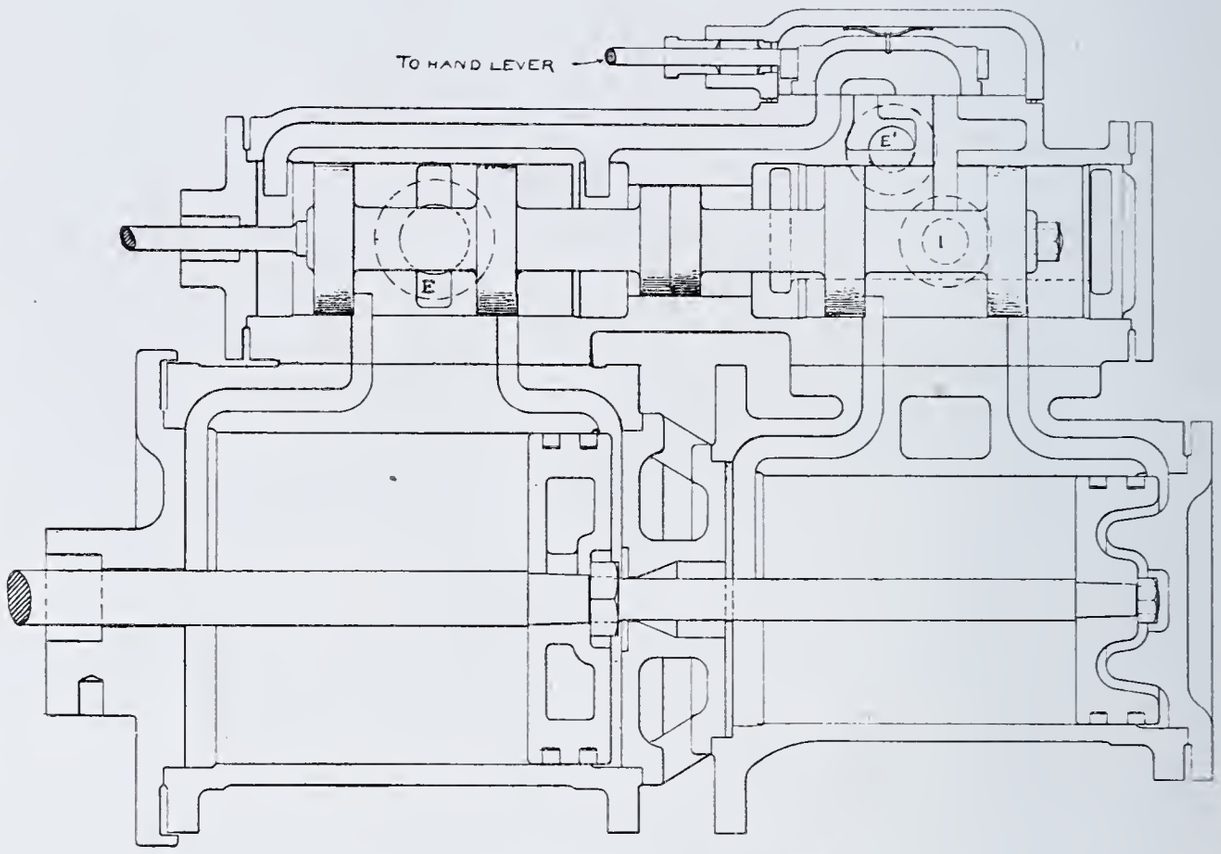

Fig. 2.—Cylinders of Compound Motor.

type, with cylinders 9″ and 12″ diameter × 12″ stroke, giving a ratio of expansion of 1 : 1.77.

The steam distribution is controlled by two slide valves, one of the ordinary or D pattern, having a bridge across the face, which was called the change valve, and was used to change the engine from simple to compound, being operated by the hand-lever shown in Fig. 1. When this change valve was in the position shown on the diagram of the cylinders, Fig. 2, the engine was working compound, port E′ being closed and the steam entering through pipe I, passing through the ports and the piston valve to the high-pressure cylinder, exhausting through the short straight port to the change valve, and thence to the feed ports of the low-pressure cylinder, being finally exhausted through

the port E. The piston valve was the one which controlled the distribution of steam to the cylinders, and was probably the earliest example of that form of valve in locomotive practice.

It will be seen from the above that, when the valve was moved from compound to simple working, steam was admitted only to the high-pressure cylinder, thus furnishing less power in that case than when compound. The piston valve was actuated by the "Joy" valve gear, in which the motion is obtained by the movement of the main rod. In order to avoid excessive clearance in the cylinders the main axle-boxes were fixed in the frame instead of having the usual vertical clearance movement, and had a layer of vulcanized fiber placed between the top of the axle-boxes and the frame to absorb the shocks, instead of using springs. The brackets carrying the car body, as well as the rear axle, were provided with springs and vertical movement as usual. The main rods are connected to a crank axle made with the crank bearing next to the wheel, as in some of Matthew Baldwin's early engines, this arrangement being known as the half crank. The axle-boxes and the frames are outside of the wheels, and cranks are placed on the ends of the axles for the coupling rods.

In addition to the effort to develop a steam locomotive with a fire-box that would be unobjectionable on city streets, there have been numerous attempts to build and operate locomotives without fire-boxes, and using either a large storage capacity of hot water to provide steam enough for a given run, or to start with an initial charge of water and steam and to keep up the required supply of steam by means of the decomposition of chemical substances of various kinds. Of such is the next example, Fig. 3, which shows what were known as the soda motors of the Minneapolis, Lyndale, and Minnetonka R. R., a road of 3 feet gage running partly through the streets of Minneapolis and to the places named. This system was designed by Honigmann, in Germany, who patented it in this country from 1883 to 1886. This installation was made under the direction of Mr. G. Kuehler, who came from Germany for that purpose.

The motor was composed of a large reservoir or boiler, and engines and running-gears of the usual type. Cylinders, $14\frac{1}{2}''$ diameter $\times$ 16" stroke; wheel base driving 5′ 0″; total, 10′ 6″. Driving wheels, 42" diameter; truck wheels, 24" diameter. Weight on drivers, 56,700 pounds; total, 63,800 pounds.

The boiler consists of three compartments, the center, which contained the hot soda solution, being made of copper, and the ends on

steam portion being made of steel. This boiler was 63″ inside diameter and contained 146 2-inch tubes and two $2\frac{3}{4}$-inch tubes 10′ $8\frac{1}{2}$″ long, making 820 square feet heat surface, and ends with about 24 square feet, or a total heat surface of 844 square feet. The safety valves for the steam boiler were set at 210 pounds pressure, and for the soda portion were set at 30 pounds pressure. All castings which came in contact with the soda solution were made of bronze, in order to minimize trouble from corrosive action.

In addition to the motors, of which four were built in 1886, there was a stationary power-plant for charging the motors with hot water for the

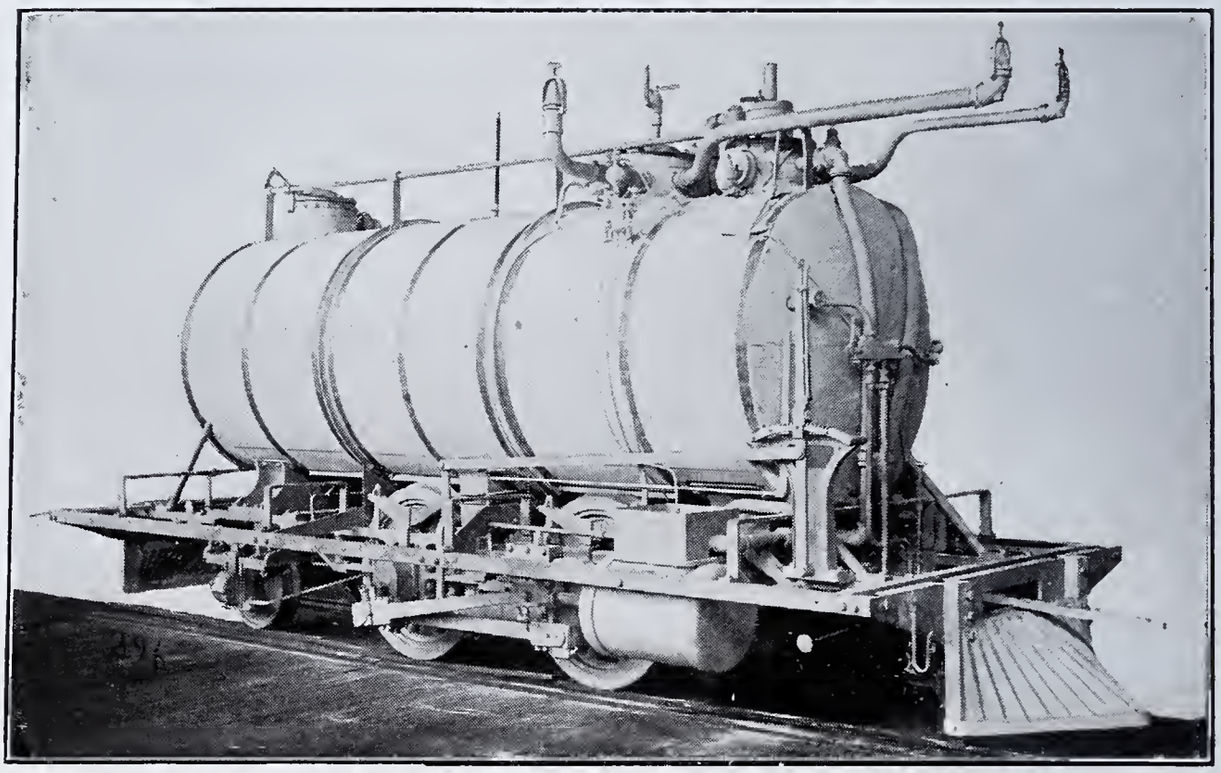

Fig. 3.—Soda Motor.

steam ends and boiling off the moisture from the caustic soda before they were started on their trips. The charging was done through the pipes shown in Fig. 3, overhanging the boiler, with caps held by yokes and screws. The method of operation was to place a quantity of caustic soda in the central portion of the boiler and partly fill the water ends with water at a high temperature, and turning steam on to the central portion, the soda was expected to take up water from the steam and thus generate heat to keep the steam pressure high enough to provide for running the motor and train for the trip. At the start steam was furnished from the central plant to start the soda, but after the motor was under way the exhaust from the engine was turned

Fig. 4.—Steam Car for Suburban Service.

into the soda compartment in order to maintain the action of the soda. This in practice proved to be the weak point in the system, owing to the excessive back pressure caused by the exhaust steam being discharged against constantly increasing pressure. The exhaust was discharged through a number of small pipes so as to act through the mass of soda. After a large amount of experimenting on the part of the promoters, without success, the engines were converted into steam locomotives;

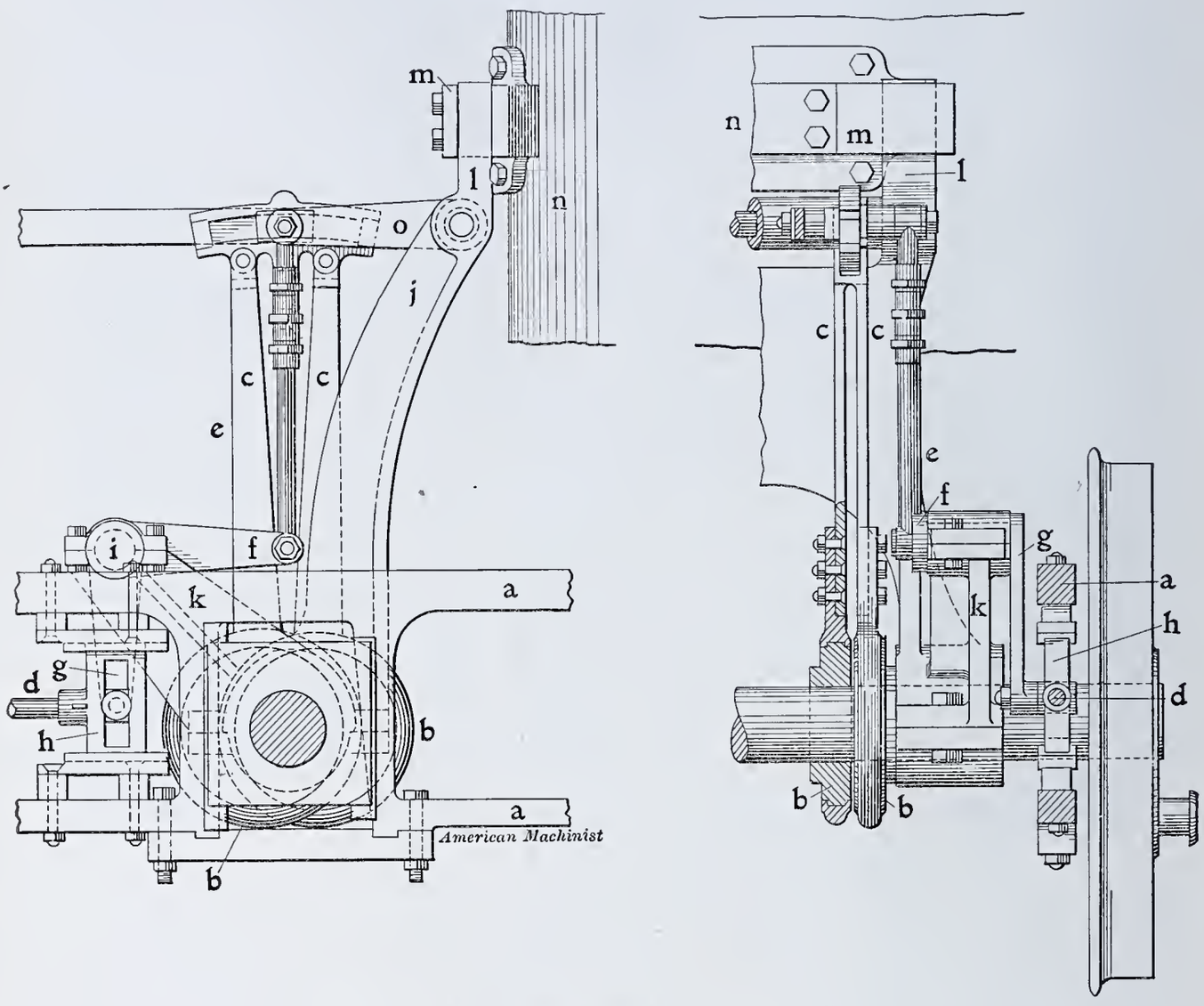

Fig. 5.—Valve Motion of Suburban Car.

and it is said that the copper work in the soda boilers was sold for enough to pay for the cost of rebuilding the engines.

Since the general introduction of trolley systems for city and suburban service, the building of the class of locomotives known as motors has practically ceased; but the engine shown in Fig. 4 is a recent experiment to operate a steam motor car on trolley car methods, the idea being to build a motor car that could be run by two men on an ordinary railroad line, one man for operating the engine and the other to act as con-

ductor. To do this the effort was made to build a self-feeding boiler, so that the engine-man would be free to attend to the running of the

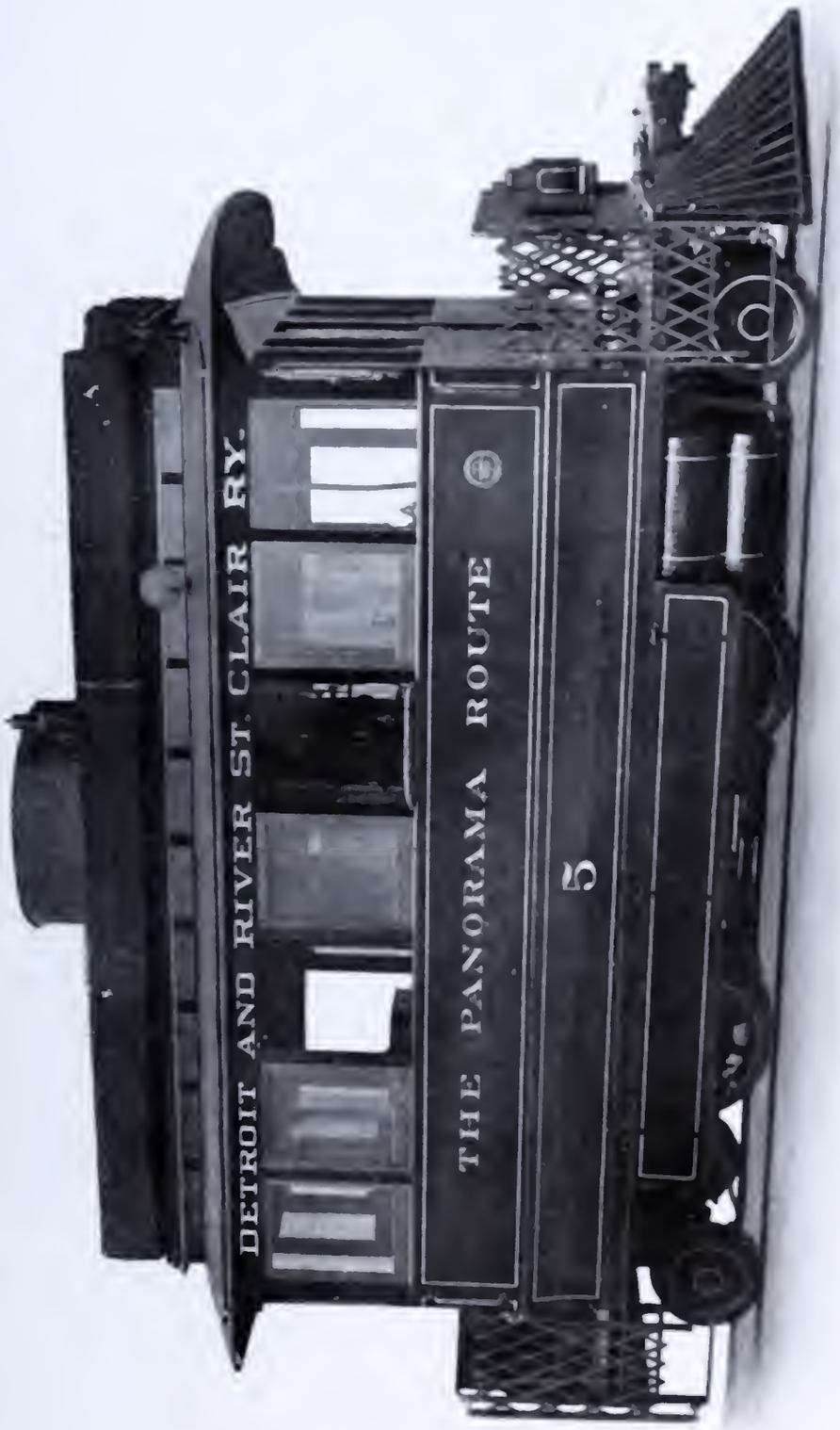

Fig. 6.—Steam Motor with Condenser.

car, and would not have to attend to the fire, or at least not as much as with the usual type of boiler.

The principal difficulty in this case was to keep the grates in order, as

the coal at the lower end of the magazine would become incandescent and burn out any device that was applied there, including the arrangement for shutting off the coal when desired. The boiler was 60″ diameter, centrally fired, self-feeding, being supplied with coal from the top of the motor roof, around stack, through a 12-inch pipe in the center of the boiler. There were 646 square feet of heating surface; working pressure, 200 pounds; wheel base rigid and driving 7′ 6″; total, 19′ 6″. Weight on drivers about 50,000 pounds; total, 70,000 pounds. Cylinders, 9½″ H. P., 16″ L. P., 18″ stroke; drivers, 42 inches in diameter; tank, 650 gallons capacity. Fuel and water capacity for 40 miles run. One had a condenser, into which all the steam from the cylinders might be diverted.

A condenser, it may be noted, was not an unusual feature of motor practice, and the object was not so much to obtain greater economy from the engine as to render the operation of the engine noiseless and to prevent the show of exhaust steam when passing through city streets.

These condensers were air condensers, the exhaust being passed through the tubing so as to traverse a considerable length, and the motion of the air doing the condensing.

An engine above described, after the self-feeding apparatus had demonstrated its unfitness for the required service, was rebuilt with a boiler of the usual locomotive type, which required its separation from the car, and it was then inclosed in a short cab and used as an ordinary locomotive, and has since been rendering satisfactory service (Fig. 6).

Mining locomotives as usually built weigh about 10 or 12 tons, and are, of course, limited to the height and width of the gangways in the mines, which are seldom as much as 6′ 0″ high in the clear. The Lehigh Coal and Navigation Co. had built in 1889 two locomotives which were unusual for this type in that they were to weigh about 24 tons (of 2000 pounds). For this mine the limits were 6′ 6″ high and 7′ 2″ wide, with a track 3′ 6″ gauge, curves 50 feet radius, and steepest grade 3½ per cent.

These engines had cylinders 14″ diameter × 16″ stroke, and to furnish steam enough, a boiler 48″ diameter was provided, which was carried on wheels 28″ diameter, thus using at once for boiler and driving wheels the most of the height limit (steam pressure, 130 pounds). There were 145 tubes 1¾″ diameter × 9′ 1½″ long, giving 600.4 square feet; furnace, 46″ long, 76″ wide, about 38″ deep, giving 64.6 square feet. Total heating surface, 665 square feet. Grate surface, 24.49 square feet. Ratio of heating to grate surface, 27 : 1. It will be noticed that

the fire-box is as wide as could be placed in the width limit. The valve motion had an "Allen" straight link, used because it required less vertical motion than the ordinary shifting link.

In ordinary railroad practice 3 per cent. is considered a very heavy grade, although there are a few grades slightly heavier than that operated by ordinary adhesion locomotives. The steepest of which the writer has knowledge is 407 feet per mile, or about 7.7 per cent., which is a short line in the Rocky Mountains, a branch of the Union Pacific R. R. narrow gage, which is operated by a consolidation locomotive with 60,000 pounds on the drivers, operating a small train. But when

Fig. 7.—Heavy Mining Locomotive.

we have a grade of 33 per cent. to climb, one naturally thinks of the ladder railway up Mount Washington in New England.

The Corcovado Railway near Rio Janeiro, Brazil, is a road of this character, ascending a mountain near that city to a popular resort overlooking the bay. The steepest grade on this road is 33 per cent., and this portion is 193 meters long, the total length of the road being 3790 meters, and having curves of 120.76 meters radius. A locomotive (Fig. 8) was required to push a load of 10 tons, cars and lading, up the 33 per cent. grade. As the weight is not depended upon for the adhesion, as that is provided for by the rack rail, every effort was made to build the engine as light as possible. The dimensions of the first engine built for this road were as follows: Track, 1 meter gauge; boiler, 40″ diameter; fire-

box, 35″ long, 36″ wide; 116 tubes $1\frac{1}{2}$″ diameter, 6′ 0″ long. Heating surface tubes, 269.32 square feet; fire-box, 40.5 square feet; total, 309.82 square feet. Cylinders, $10\frac{3}{4}$″ diameter × 16″ stroke; drivers, $41\frac{35}{100}$″ diameter at pitch line, made of cast steel; leading and trailing wheels, $20\frac{1}{2}$″ diameter; tank, 250 gallons. Total weight, 26,448 pounds. This engine was built in 1888. Grate surface, 8.75 square feet. Ratio heating to grate surface, 35.4 : 1. In 1891 another engine was built for this road with cylinders 11″ diameter × 16″ stroke and drivers $37\frac{59}{100}$″ diameter, but otherwise as the preceding one. These engines were very well supplied with brakes, having a crane or band brake on the crank disc; also brake blocks on the back wheels, operated by hand-screw shafts; also the Le Chatelier or water brake on the cylinders.

Engines of the same description have been built for the Estrada de

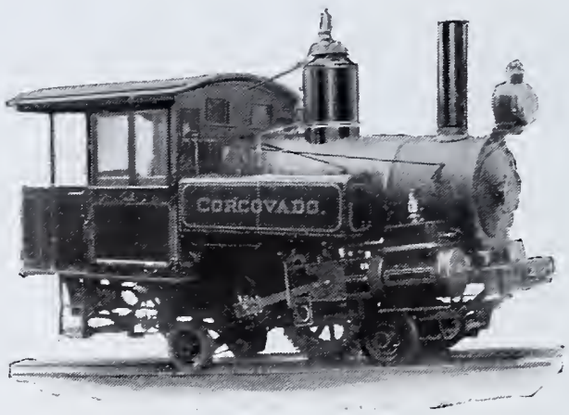

Fig. 8.—Corcovado Rack Locomotive.

Ferro Principie do Gráo Pará in 1885 to operate a road having 15 per cent. grade; also for the Leopoldina R. R. in 1897 and 1900 to haul 22 tons up a 15 per cent. grade.

The engine for the Estrada de Ferro Principie do Gráo Pará (Fig. 9) has 496 square feet of heating surface and about 14 square feet grate surface, a ratio of 35 : 1. Cylinders 12″ diameter × 20″ stroke; cog-wheels wrought-steel; drivers, diameter at pitch line 41.35″. To haul a train of 22 metric tons (or 48,488 pounds) at a speed of 9 kilometers per hour, and to haul a train of 18 metric tons (or 39,672 pounds) at a speed of 11 kilometers per hour, over the road, which has 15 per cent. grades, the weight of the engine is limited to 16 metric tons in order that the pressure on the rack shall not exceed 6000 kilograms. These engines were fitted with the same kinds of brakes and the back-pressure pipe as on the other engines for rack railroads.

Europe has also been a customer for locomotives of this class, two engines very similar to Fig. 9 having been supplied to Count Telfener, of Florence, Italy, in 1892, to operate a road 8 kilometers long, maximum radius of curve 80 meters, and grades one-third being 8 per cent., one-third varying from 8 per cent. to 18 per cent., and the remaining third from 18 per cent. to 22 per cent.

These were followed in 1893 by an additional locomotive, the same as the first three with the exception of having compound cylinders of the Vauclain system. H. P. cylinder, 8″ diameter; L. P., 13″ diameter, 16″ stroke; piston valve, $6\frac{1}{8}$″ diameter. The gears that mesh in the rack rail are put to a severe test, and are made of steel having 100,000

Fig. 9.—Rack Railroad Locomotive.

pounds per square inch tensile strength with an elastic limit of 40,000 pounds and an elongation of 15 per cent. in 4 inches. These engines are provided with a back-pressure pipe and a valve in the exhaust nozzle, so that in descending the grades the nozzle can be closed to prevent dirt entering the cylinders, and, steam being shut off, the cylinders pump air into this back-pressure pipe, thus producing a resistance to the movement of the engines which is controlled at will by the engine-runner by means of a valve in the pipe, which can be opened or closed from the cab. This arrangement produces quite a high pressure in the pipe, and if allowed to escape freely, produces a violent noise; so to

prevent annoyance from that cause a muffler is provided on the end of the pipe, which can be seen in Fig. 9, directly under the cab.

When, in 1890, what is popularly called the "cog" railway opened, ascending Pike's Peak from Manitou, Colorado, the peculiar looking locomotive shown in Fig. 10 was employed, of which there were three built. The following items from the specification will be of interest: Total length of road, $8\frac{3}{8}$ miles; total height to ascend, 7600 feet. In no case will the speed exceed 8 miles per hour, the whole trip to be made with 4 stops for water, including the starting-point. The last water station is on 17.36 per cent. grade, 14,400 feet from the summit. Running time, thirty-four and a half minutes; sharpest curve, 359′ radius,

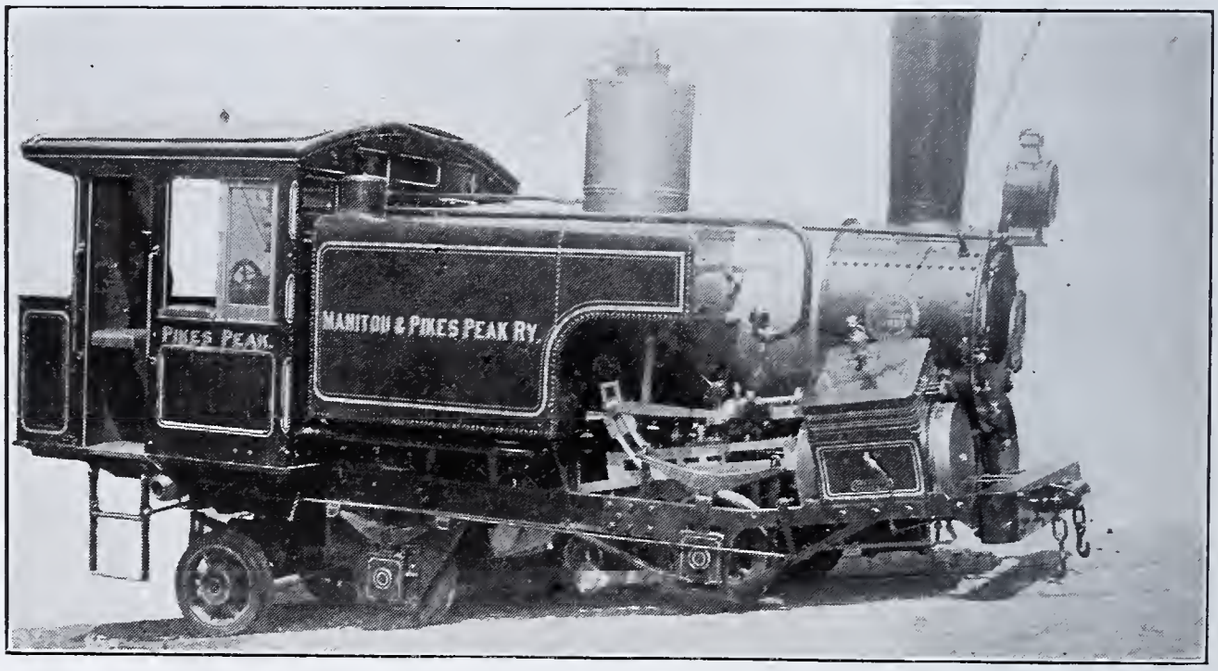

Fig. 10.—First "Abt" Locomotive for Pike's Peak.

which occurs on 22 per cent. grade. The possibility of more fuel and water consumption than calculated at height of 12,000 feet above sea-level to be considered. This engine had nine wheels, three pairs of which can be plainly seen, and the other three being on the longitudinal center line of the engine and scarcely showing in Fig. 10. Of the three pairs shown, two pairs are fixed carrying wheels, while the wheels of the other pair are mounted in a pony truck under the cab.

The particulars of this engine were as follows: Boiler, 44″ diameter; fire-box, 48″ long, $59\frac{3}{8}$″ wide; 176 tubes, $1\frac{1}{2}$″ diameter, 7′ 6″ long, with 160 pounds per square inch steam pressure. Heating surface fire-box, $58\frac{1}{4}$ square feet; tubes, $518\frac{1}{4}$ square feet; total, $576\frac{1}{2}$ square feet. Grate surface, 19.7 square feet. Ratio of heating to grate surface, 26.3 : 1.

Wheel base, rigid, 6′ 8″; driving, 4′ 1¼″; total, 11′ 1½″. Cylinders, 17″ diameter, 20″ stroke. Exhaust nozzle to close when engine is reversed, so that the cylinders could pump air into the steam-pipes and a back-pressure pipe, where it was controlled by a valve operated by the engine-runner and terminating in the muffler under the cab. Main pinions of wrought steel. Three driver wheels constructed of steel plates with equalizing devices according to Mr. Abt's system. Drivers at pitch-line $22\frac{468}{1000}$ inches, open hearth cast-steel centers. Tires held by Abt's patent spring. Tires' ultimate tensile strength 100,000 pounds per square inch; elastic limit, 40,000 pounds. Equipped with band steam-brake on front and second drivers and with band hand-brake on back driver; also with water-brake with cold water from tank.

These engines were guaranteed to push 42,000 pounds on 16.33 per cent. grade at a speed of 5 miles per hour, or on a 25 per cent. grade at 3 miles per hour, or on an 8 per cent. grade at 8 miles per hour. The three driving wheels were mounted in a separate framing, and were propelled from the main engine shaft by a pinion on the same, which meshed into two of the driving wheels, and the third driving wheel was connected by coupling rods with the middle wheel. This arrangement was designed by Mr. Abt, but did not prove to be entirely satisfactory, as there was not flexibility enough in the design to allow the gearing to accommodate itself to the variations on the road, particularly on the curves, resulting in several breakdowns. The "Abt" system of rack rails consists in making the rack of two or more sections, with the teeth of one section spaced opposite the spaces in the opposite section, when two sections are used, as on the Pike's Peak R. R., or the spaces divided in thirds when three sections are used.

After running for three years these engines were rebuilt, being converted into compound locomotives on the Vauclain system (Fig. 11), and subsequently two others were built, one in 1897 and one in 1901. These engines have boilers of the same size as the original engines, and the same heating and grate surface, burning Colorado anthracite of the following analysis: Fixed carbon, 87.51 per cent.; volatile combustibles, 7.62 per cent.; moisture, 0.72 per cent.; ash, 4.15 per cent. Pitch of teeth in rack bar is 4.70588″; wheel base rigid and driving, 5′ 7″; total, 12′ 3″. Weight about 47,000 pounds on drivers, 58,500 pounds total. Cylinders, 10″ H. P., 15″ L. P., 22″ stroke; 7″ diameter piston valves. Piston rods, Krupp steel. Tank, 600 gallons capacity for water and fuel space for 3000 pounds of coal. Carrying wheels, 25¾″ diameter.

Connecting rod, axle, and crank steel, tensile strength not less than 85,000 pounds per square inch; elongation of 15 per cent. in section originally 2″ long and $\frac{5}{8}$″ diameter.

Rack gear steel to have a tensile strength of 110,000 pounds, with an elongation of not less than 15 per cent. in 4″; elastic limit not less than 45 per cent. of the ultimate. These qualities must be shown in separately hammered specimens $\frac{5}{8} \times 4$″ between measuring points. Rack gears forged on driving axle. Front pusher roller of steel; this is the roller that pushes against the car.

Attention will be called to the method of coupling the cylinders to the drivers by means of the side levers shown in Fig. 11. With

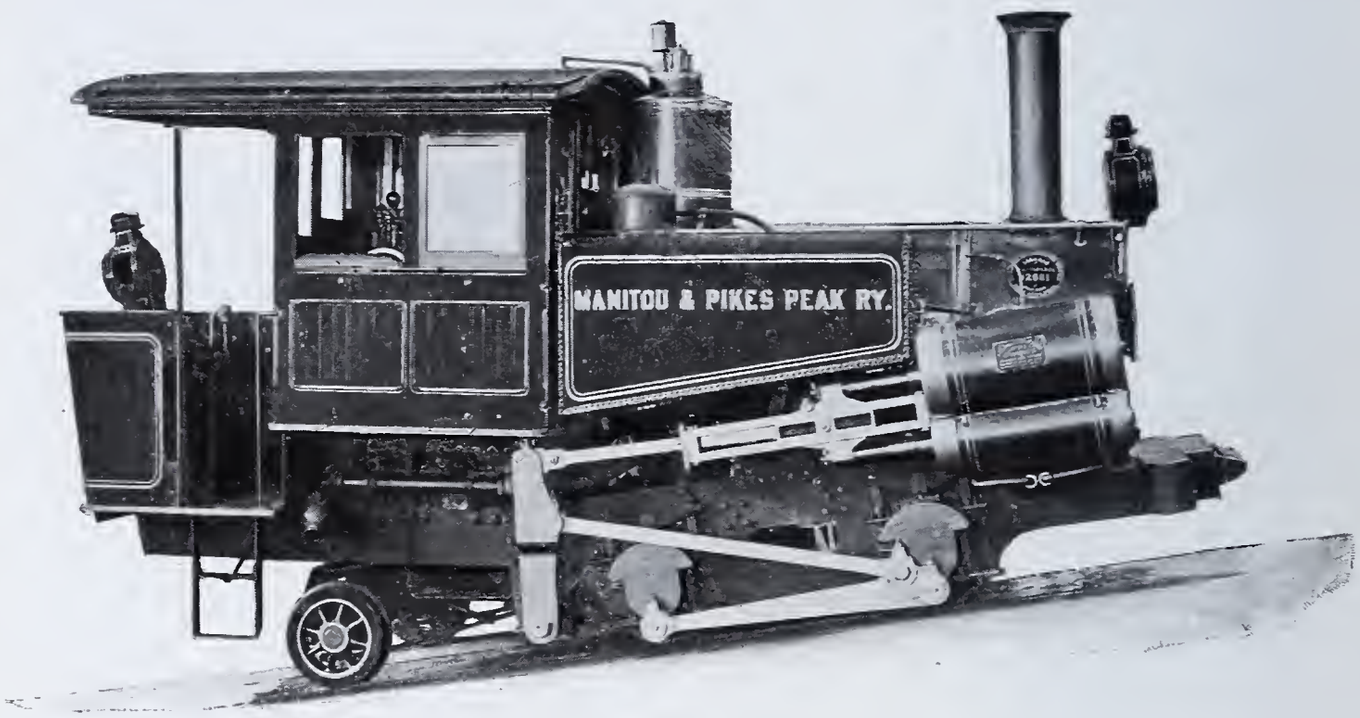

Fig. 11.—Baldwin's "Abt" Locomotive for Pike's Peak.

the small driving wheels, $22\frac{486}{1000}$″ diameter at the pitch line, that are used it is possible to have only a stroke of the cranks of 7″; but in order to have a cylinder of economic proportions, it was figured that 22″ stroke was required, and so the method shown was therefore adopted. The rack wheels are on the same axles as the cranks, shown in Fig. 11, to which the coupling rods are attached.

Another example of the "Abt" system is shown by the San Vicente, which is a combined rack and adhesion locomotive, which is one of three built by the Baldwin Locomotive Works for the Cia Minera de Peñoles. The road on which these locomotives operate is 2 feet 6 inches gage, extending from Mapimi, Mexico, into the silver-mining districts of the adjoining mountains, the locomotives being used to transfer the ore

from the mines to the smelter. The rack portion of the road is about 3 miles in length, and the grade varies from 9 per cent. to 13.6 per cent. The total weight of one locomotive in working order is about 59,000 pounds, of which 41,000 pounds is on the drivers, and it is capable of pushing up the grade of 13.6 per cent., at a speed of 6 miles per hour, a load of 18 tons, consisting ordinarily of two empty cars and one car loaded with supplies. It is also capable of controlling a load of about 36 tons down the maximum grade. By a system of clutches on two of the driving axles, the carrying wheels can be locked to these axles and the locomotive operated by adhesion for switching purposes at the terminals of the grade. The 13.6 per cent. grade is combined with curves of 70 meters radius (about 218 feet). General dimensions:

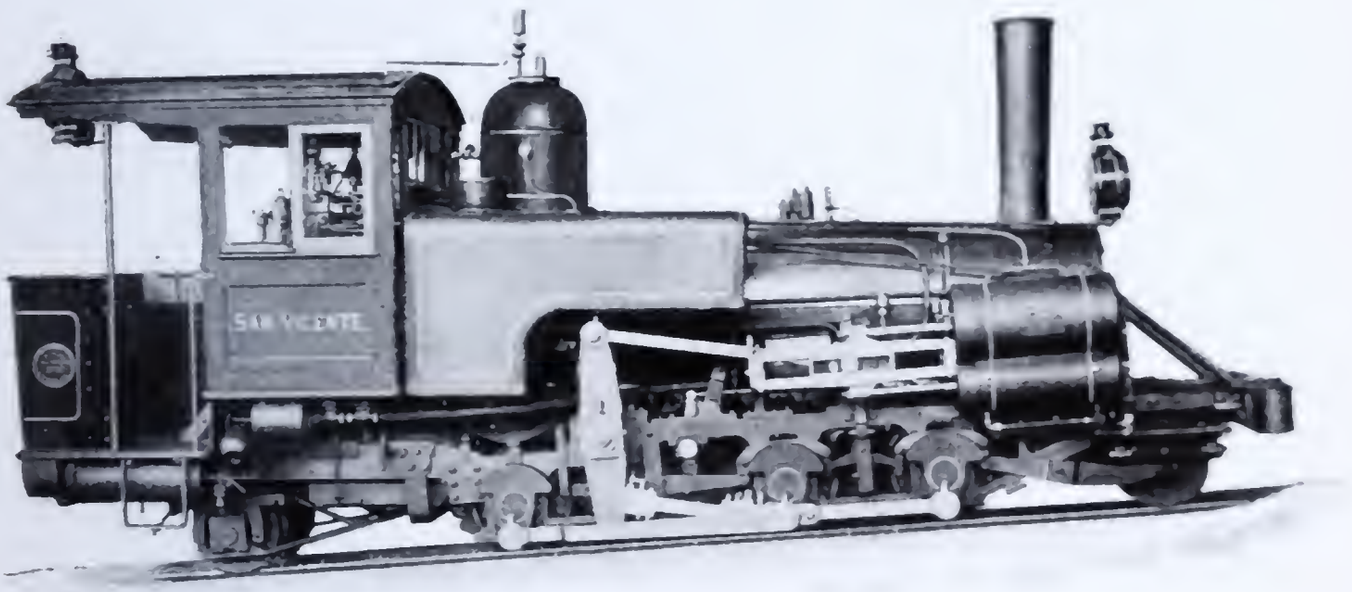

Fig. 12.—Rack Locomotive for Cia Minera de Peñoles.

Cylinders, H. P. 9½″ diameter, L. P. 15″ diameter, stroke 22″. Boiler, 36″ diameter; working pressure, 180 pounds per square inch. Fire-box, 35″ long, 37″ wide; grate area, 9 square feet. Tubes 106, 1½″ diameter, 10′ 2″ long. Heating surface: fire-box, 40.5 square feet; tubes, 419.8 square feet; total, 460.3 square feet. Ratio of heating to grate surface, 51 : 1. Adhesion wheels, 25¾″ diameter; rack wheels pitch diameter, 22.468″ diameter; wheel base driving 3′ $2\frac{7}{16}$″, rigid 8′ 9⅛″; total, 19′ 5⅜″. Tank, 400 gallons of water.

The heaviest rack rail locomotive that has been built as yet is the one which was built for the Estrada de Ferro Principie do Gráo Pará, Brazil (Fig. 14), to work a line having a grade of $3\frac{6}{10}$ miles at the rate of 15

Fig. 13.—Rack Locomotive with Train on 13.6 per Cent. Grade.

per cent. rise and $\frac{4}{10}$ mile at the rate of 8 per cent. rise. Wheel base $3\frac{1}{8}$″ rigid, 3′ 11″ driving, 15′ 8″ total. Cog-wheel, drivers of wrought steel, diameter at pitch-line $41\frac{8.5}{10.6}$″. Truck, front rigid center with front wheels 27″ diameter and back wheels 25″ diameter. Trailing wheels 27″ diameter. Tank, 900 gallons capacity; fuel space for 2000 pounds of briquettes. Cylinders, $17\frac{1}{2}$″ diameter, 20″ stroke. Boiler, 50″ diameter, to carry 160 pounds per square inch working pressure. Fire-box, 66″ long, 49″ wide, making 22.4 square feet grate surface.

Fig. 14.—Rack Locomotive Antonio Prado.

Tubes 149, 2″ diameter, 11′ 2″ long, giving 864.7 square feet heating surface, plus 63 square feet in fire-box, or total heating surface of 927.7 square feet. Ratio of heating to grate surface, 41.4 : 1. This engine is also provided with the usual arrangement of brakes used on other rack rail engines, including the back-pressure device.

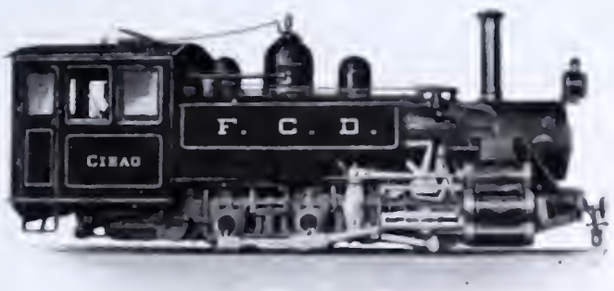

Fig. 15.—Combination Rack and Adhesion Locomotive.

In 1895 a seven-wheeled combined rack rail and adhesion locomotive was built for the San Domingo Improvement Co. The rack railroad was to be of a temporary nature, it being specified that the engine is to be used less than one year as rack engine, constructed so rack can be removed and engine used as ordinary adhesion engine. Guaranteed to haul easily 50 tons of cars and lading over line with 9 per cent. grades, 100 meters radius curves. Wheel base 3′ 7″ driving, 9′ 0″ total. Drivers, rack $22\frac{4.6.8}{10.0.0}$″ at pitch-line, forged solid on axle. Adhesion

drivers, 33″ diameter. Steam-brake on adhesion wheels. Hand-brake on rack wheels. Weight limited to 66,000 pounds. Boiler 42″ diameter; working steam pressure, 180 pounds. Fire-box, 41½″ long, 43¾″ wide, or 12.6 square feet grate surface. Tubes 94, 2″ diameter, 11′ 10″ long, or 578 square feet and 50 square feet in fire-box, or total heating surface 628 square feet. Cylinders, adhesion 8″ H. P., 13″ L. P., 16″ stroke; cylinders, rack 11″ diameter, 16″ stroke. Exhaust with valve to close when engine is reversed. Back-pressure escape pipe, the steam passages in each cylinder to be connected by a pipe, regulated by a valve from cab, escape pipe terminating in a muffler.

An interesting and unusual locomotive is shown by the Intercolonial Ry. engine 228 (Fig. 16), which was built in 1899 and is fitted with

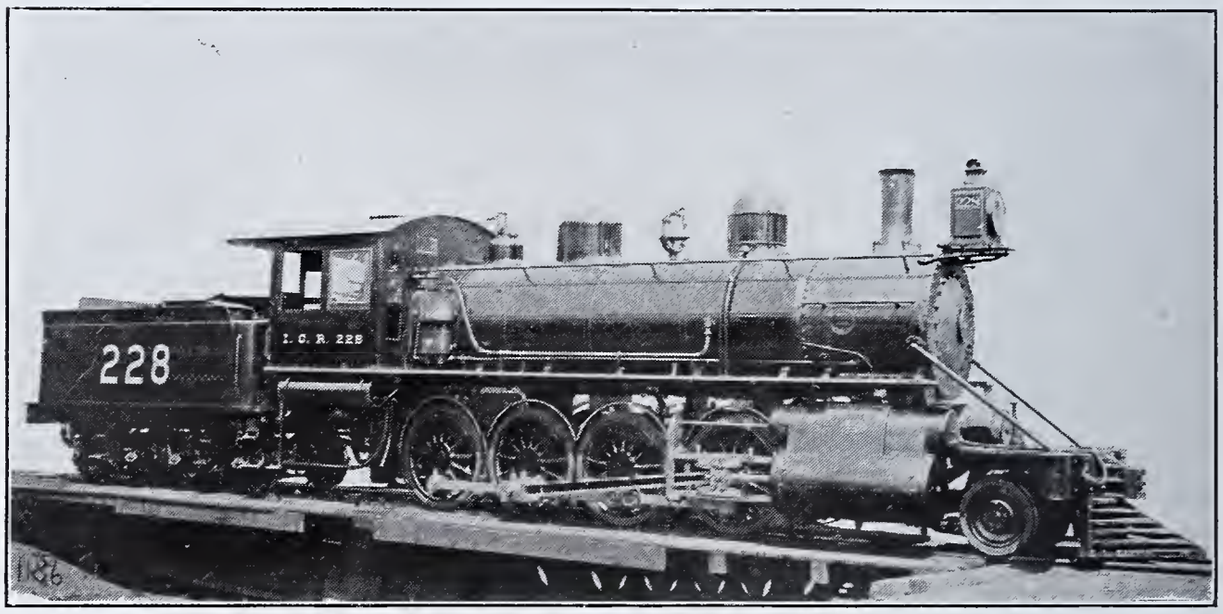

Fig. 16.—Cleveland's Locomotive.

cylinders invented by Mr. W. F. Cleveland. The distinguishing feature of this cylinder is the central direct exhaust, which is independent of the admission valve, and also serves to aid the exhaust at the end of the stroke and gives a slight amount of compression, but a very much less amount than is obtained by means of the ordinary slide valve. The valve is of the central admission piston type and the admission ports are very short and direct, giving very little clearance (Fig. 17). The exhaust passages from the central exhaust are separate from the end-exhaust passages. The central exhaust is discharged through the center of an annular exhaust nozzle, and the end-exhaust passage leads to the annular passages in the same nozzle. The central, being of greater

volume, is supposed to have an entraining action on the other and to assist it by induction.

It is claimed that this feature makes the Cleveland engine easier running on account of less back pressure and cushioning than is obtained in engines of the ordinary type. The claim is also made for this system of single expansion engine that there is a direct saving in quantity of steam used at a given pressure to do a given amount of work. This, of course, means less coal consumption and other advantages, owing principally to the rapid exhaust keeping the temperature above

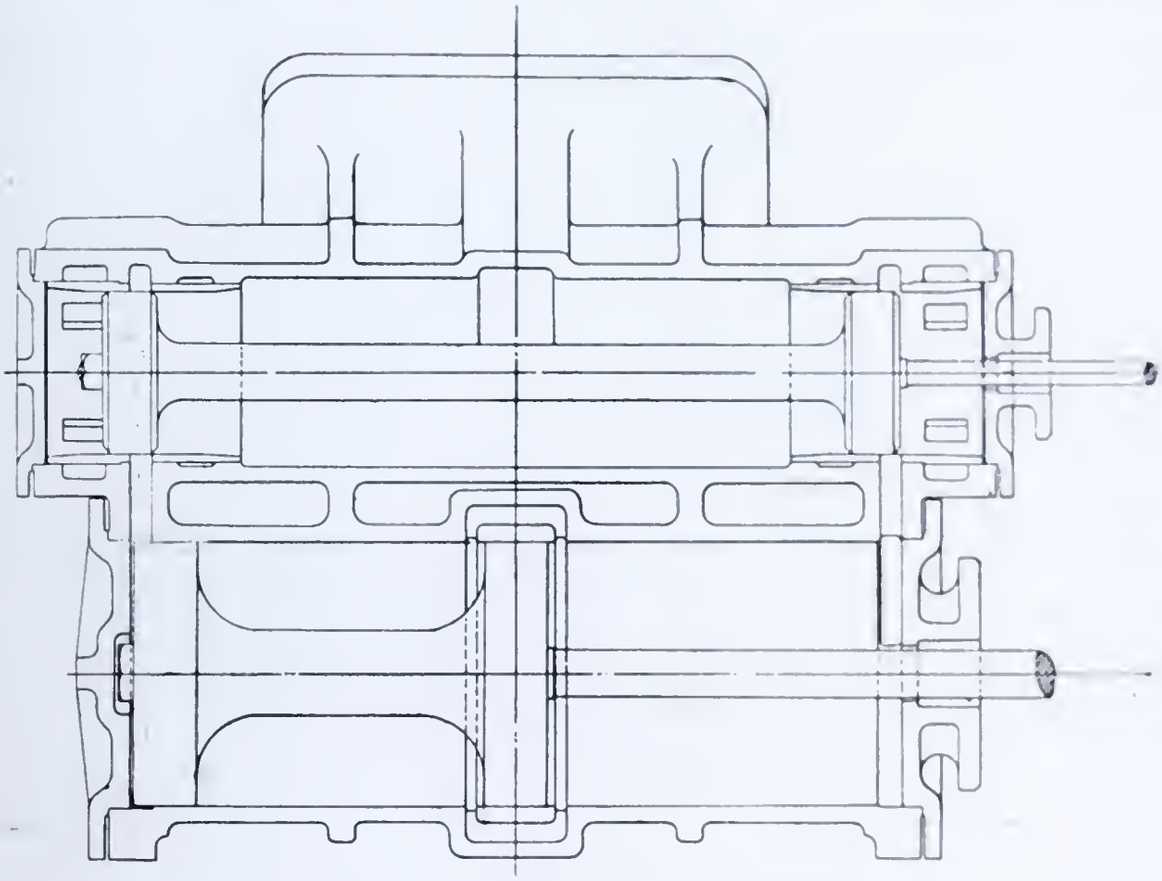

Fig. 17.—Cleveland's Locomotive Cylinders.

that of other simple engines, thus allowing a greater range of expansion and a greater mean effective pressure on account of less back pressure due to the rapidity of the exhaust.

It will also be noticed that the space between the piston heads (Fig. 17) will always be filled with steam at nearly the initial exhaust temperature, and this is supposed to keep the walls of the cylinder in a more favorable condition than is the case with the ordinary cylinder. This was, I believe, the second engine constructed on this system, both of which are on the Intercolonial Ry., and the responsible officers of that railway are so well pleased with the service they have done that they have since

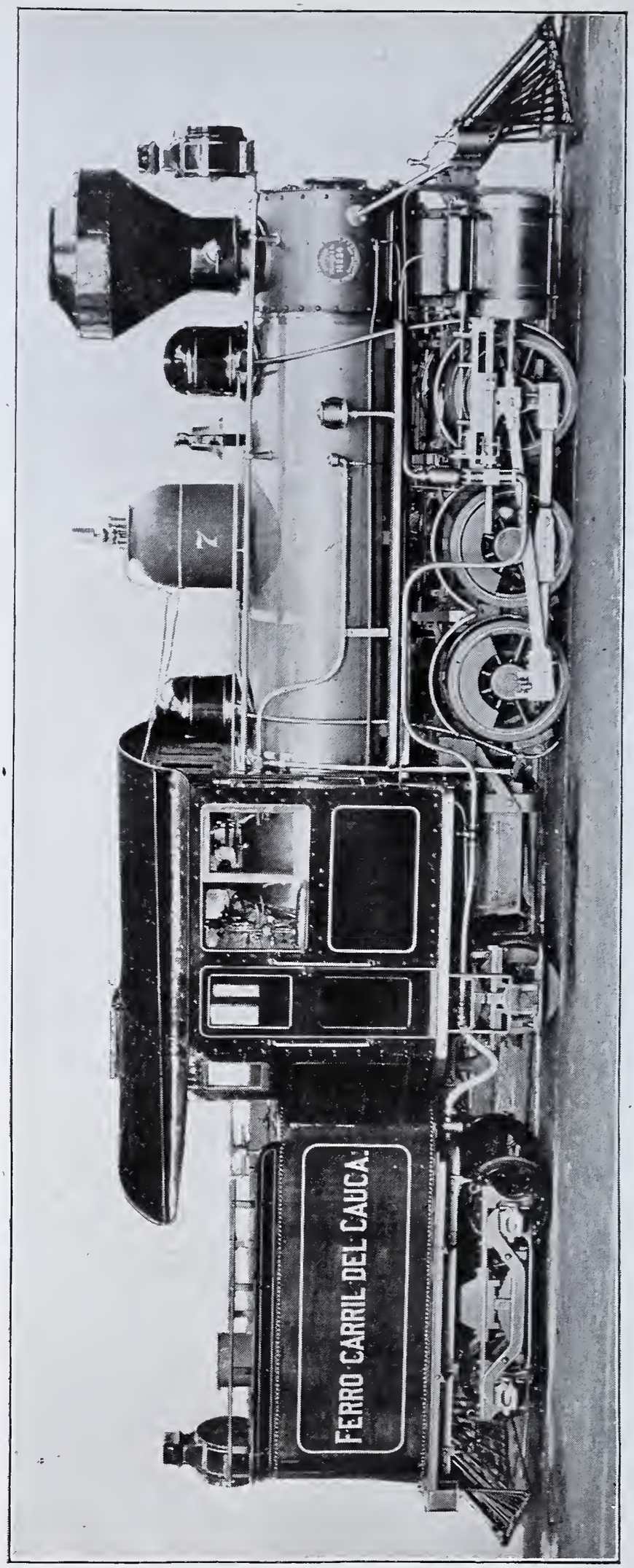

Fig. 18.—Locomotive for Cauca Railway.

ordered more engines of the same type. The particulars of engine 228 are as follows: Gauge of road, 4′ 8½″. Consolidation locomotive with Cleveland cylinders. Boiler 66″ diameter; working steam pressure, 200 pounds per square inch. Fire-box 114⅛″ long, 41¼″ wide, average depth 64″, burning soft coal of medium quality; 236 tubes, 2¼″ diameter × 14′ 0″ long, making 1934.6 square feet in tubes and 161.1 square feet in fire-box, or a total heating surface of 2095.7 square feet. Grate area, 32.7 square feet, or a ratio of 64 : 1. Wheel base, driving 15′ 3″; total 25′ 9¾″, and is calculated to pass curves of 200 feet radius with the rails spread 1″ wider than gage. Cylinders 21″ diameter, 28″ stroke, steam ports 19″ × 1¾″. Exhaust ports 19″ × 1¾″ auxiliary and 56″ × ⅞″ main. Valve 13″ diameter, piston type, 7″ travel, 1⅛″ admission lap, ½″ exhaust lap; no lead. Driving wheels 56″ diameter, journals 8″ × 12″. Weight on drivers, 147,000 pounds; on truck, 21,900 pounds; total, 168,900 pounds.

Fig. 18 shows a six-coupled locomotive for the Cauca Ry., U. S. of Colombia. I cannot do better than quote from the description published by Burnham, Williams & Co. to describe this engine.

"The above locomotive is designed to meet the following requirements. The road is of 3-foot gauge with heavy grades and short curves. There are no turn-tables on the line, so that the locomotive must run in either direction. The required hauling capacity necessitated the maximum weight per axle, allowable for the light-rail section in use. In order to maintain this hauling capacity without overloading the rails, the adhesion must be kept constant, and no fluctuation allowed, such as would be occasioned by carrying the water and fuel on the driving wheels.

"It was stipulated that the tank capacity should be 1000 gallons of water, with allowance for about one cord of wood. In order to meet these requirements in a locomotive with a tank supported on the engine frame over a trailing truck, it would be necessary to contract to the utmost the space devoted to the operators, and even then the wheel base would be of such a length as to make it difficult to operate the locomotive on the curves. It was therefore decided to make the driving wheel base as short as would be consistent with the proper construction of the locomotive, placing a center-bearing two-wheel truck under the rear frames back of the fire-box; this truck to act also as a support for the front end of the tank frame, an ordinary side-bearing four-wheel truck being introduced to carry the majority of the weight of the tank. By referring to Figs. 19 and 20 the construction can be easily noted,

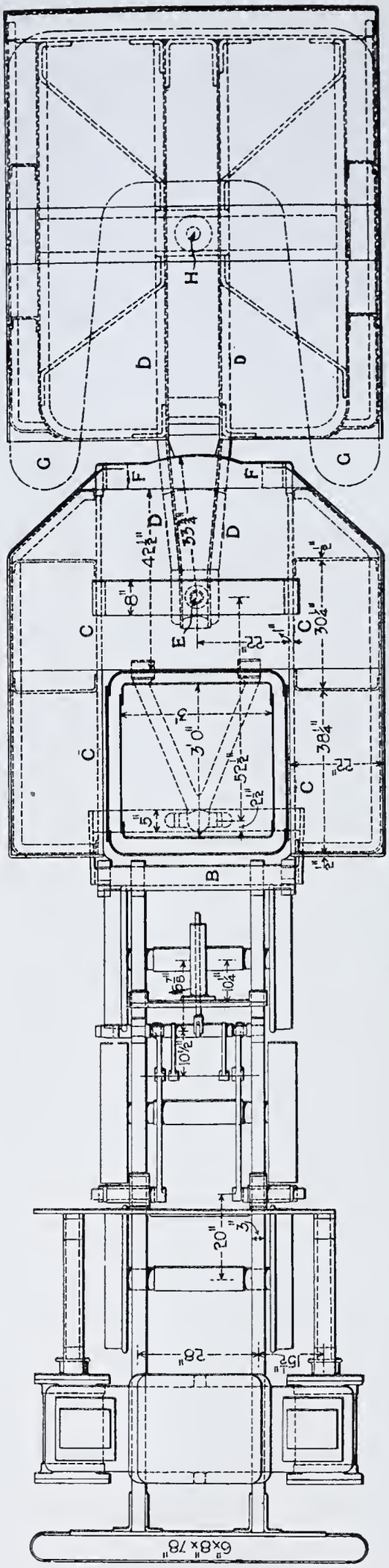

Fig. 19.—Plan of Locomotive for Cauca Railway.

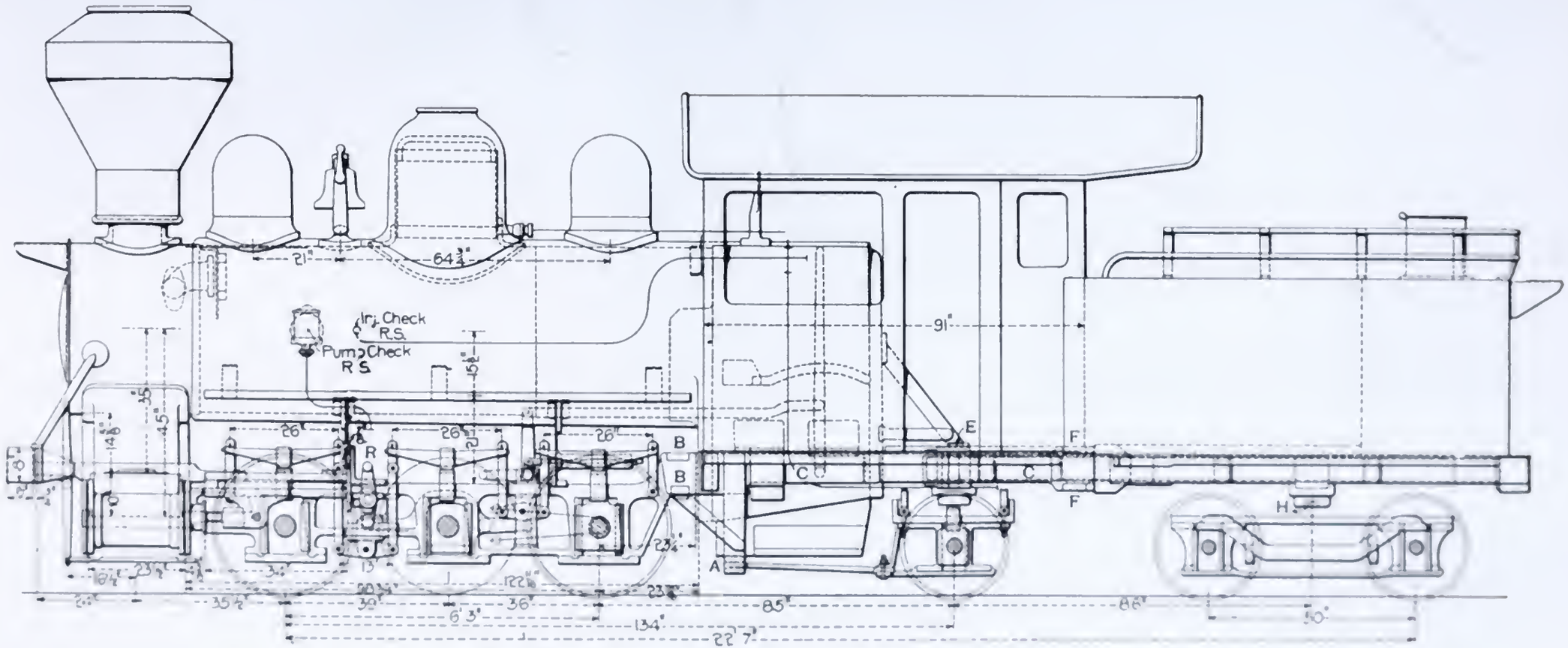

FIG. 20.—ELEVATION OF LOCOMOTIVE FOR CAUCA RAILWAY.

Two strong braces, *B B*, are secured to the rear ends of the main frame and extend across in front of the fire-box, these being connected at their outer extremities to the slab frame, *C C*. These frames extend backward along the sides of the fire-box and support the foot-board and cab. Suitable cross-braces are placed at the rear of the boiler, terminating in bumpers, *F F*. A two-wheel or "pony truck," pivoted at *E*, supports this portion of the locomotive. By this arrangement a total wheel-base of 13′ 4″ is obtained for the engine alone.

"The tank is of the ordinary U shape supported on a channel iron frame, the middle members, *D D*, of this frame extend forward and are secured to the center-pin, *E*, of the engine truck. A four-wheel side-bearing truck carries the tank frame and is pivoted at *H*. The tank is coupled close, and the rear of the cab is made octagonal in form to allow for the lateral motion of the tender in passing the curves. The tender frame is free to turn about the engine-truck center-pin *E*, and the four-wheel truck swivels about its center *H*. Allowance is also made for the rise and fall of the tender truck due to the unevenness of the road bed, thus giving the utmost flexibility and capacity of adaptation to vertical and horizontal inequalities of the road. A large proportion of the weight of the engine is carried on the driving wheels, and is thus utilized for adhesion. Ample space is provided at the back of the boiler for the accommodation of the engineer and fireman.

"This locomotive has the advantage over one with a four-wheel tender, in that while it is fully as flexible it is much steadier and better adapted to running backward."

Locomotive was built from design by M. N. Forney, M.E. Grades, 4 per cent.; curves, 200 feet radius. Rails 30 and 40 pounds per yard. Speed 19 miles per hour. Estimated to haul 60 to 70 tons of 2000 pounds at 9 to 10 miles per hour up a straight grade of 4 per cent., frictional resistance not exceeding 10 pounds per ton. Cylinders, 12″ diameter, 16″ stroke. Boiler, 40″ diameter; working pressure, 160 pounds. Fire-box, $36\frac{3}{16}$″ long, 36″ wide. Tubes 112, $1\frac{3}{4}$″ diameter, 10′ 0″ long. Heating surface: fire-box, 45 square feet; tubes, 507 square feet; total, 552 square feet. Grade area, 9 square feet. Ratio of heating to grate surface, $61\frac{1}{3} : 1$. Driving wheels 33″ diameter. Truck wheels 24″ diameter. Wheel base, driving 6′ 3″; total engine, 13′ 4″; total engine and tender, 22′ 7″. Weight in working order on drivers, 41,000 pounds. Total engine, 46,000 pounds; total engine and tender, 66,000 pounds. Tank 1000 gallons capacity.

In 1880 there was built an experimental "single" locomotive for the

Philadelphia and Reading R. R. Co. (Fig. 21), but which, not meeting their requirements, was sold to the Eames Vacuum Brake Co. and used by them for the purpose of exhibiting the vacuum brake to railroad companies. They sent it to England in the effort to do business there; but not meeting with success, the locomotive was sold there and broken up.

The principal dimensions of this locomotive were as follows: Boiler 52″ diameter; to carry 130 pounds per square inch working pressure. Fire-box 96$\frac{7}{16}$″ long, 84″ wide, or 56 square feet of grate. 1384 square feet heating surface; a ratio of 24.9 : 1. Wheel base, rigid 8′ 0″. Total, 21′ 1″. Cylinder 18″ diameter, 24″ stroke, Allen valves. Drivers 78″ diameter. Trailing wheels 45″ diameter. Driver journals 8″ diameter × 9$\frac{1}{2}$″ long. Trailing journals 7$\frac{1}{2}$″ diameter × 8″ long. Truck wheels

Fig. 21.—"Single" Locomotive, 1880.

36″ diameter. Engine truck journals 5″ diameter, 8″ long. This engine was provided with a traction-increasing device, the equalizing beam between the driving and trailing wheels being provided with an adjustable fulcrum, worked by a steam cylinder attached under the boiler. A device somewhat similar in principle, but differing in detail, has been applied to a heavy Atlantic type locomotive on the New York Central and Hudson River R. R., which has been put in service within a year. This locomotive in some respects was a forerunner of several notable types that have been built in recent years, as the Columbia, Atlantic, Prairie, and "Single" types now doing good service on various railroads, the distinctive feature of which is the use of a trailing wheel of comparatively small diameter under the fire-box, thus permitting the use of a wide grate with sufficient space from the surface of the fire to

the lower tubes, and also permitting the use of as large an area as is needed without making the grate so extraordinarily long that it is difficult for a man to work the fire and throw coal to the further end of the fire-box. This use of a trailing wheel also aids to keep the height of the boiler above the rails within reasonable limits.

This brings us to a consideration of the Columbia type, of which an

Fig. 22.—Philadelphia and Reading R. R. Columbia Type.

example is shown in Fig. 22. Eleven locomotives of this type were built for the Philadelphia and Reading R. R. from December, 1891, to April, 1893, one of which was exhibited at the World's Fair at Chicago in 1893. This type was named the "Columbia," from another engine similar

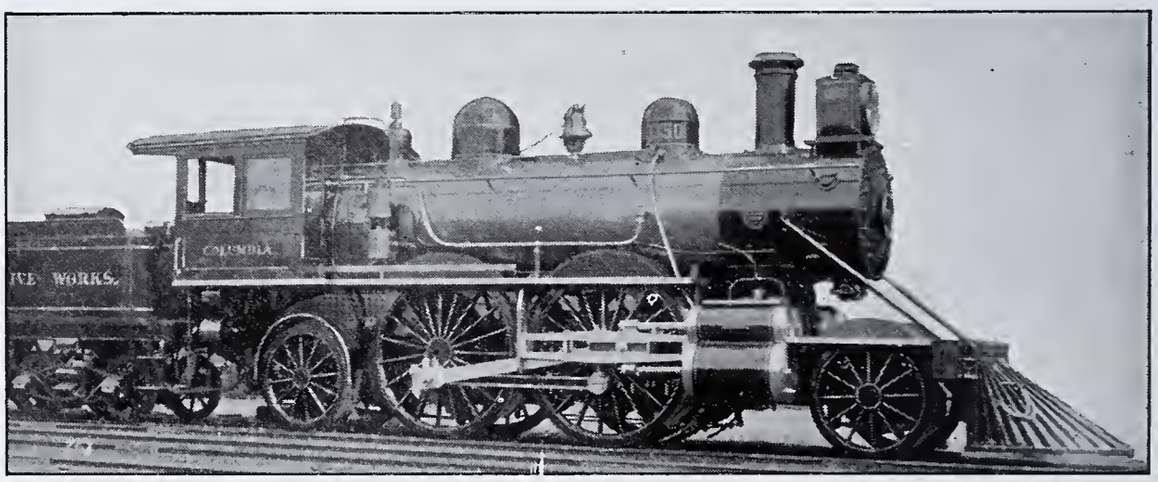

Fig. 23.—Locomotive "Columbia."

to the Philadelphia and Reading built for the exhibition, but with a narrow fire-box, which was named the "Columbia" (Fig. 23). The dimensions of the Philadelphia and Reading engines are: Total weight in working order, 129,700 pounds; on driving wheels, 82,700 pounds. Total wheel base, 23′ 4″. Driving wheel base, 6′ 10″. Diameter of cylinder, 13″ H. P. and 22″ L. P. Stroke, 24″ Vauclain type. Diame-

ter of driving wheels, 78″; diameter of truck and trailing wheels, 48″. Boiler, 57½″ diameter; working steam pressure, 180 pounds per square inch; 324 tubes, 1½″ diameter, 10 feet long. Fire-box 9′ 6″ long, 8 feet wide, or 76 square feet grate surface. Heating surface, in fire-box and combustion chamber, 173 square feet; in tubes, 1262 square feet; total, 1435 square feet. Mr. L. B. Paxson, then superintendent of motive power of the Philadelphia and Reading R. R., thinking a "single" driver locomotive would be efficient for high-speed service, altered one of these engines into a single engine by taking off the side rods and substituting weights in their place, and obtained such good results as led to the building of a type of locomotive which is very unusual in the United States, although frequently met with in England, having a single pair of drivers, or, as they have been popularly named on the Philadelphia and Reading R. R., "the bicycle engines," of which two have been built for the above-named road (Fig. 24). These were designed to take a train at

Fig. 24.—Compound "Single" Locomotive.

high speeds, and each one has run several miles in forty-five seconds, or at the rate of 80 miles per hour, with four vestibuled cars on the Bound Brook R. R. going from Philadelphia to Jersey City, and has hauled eight cars, four of which were 12-wheeled, from Jersey City to Philadelphia (the usual train is three or four cars). The single pair of drivers are 84″ diameter; trailing wheels, 54″ diameter; truck wheels, 36″ diameter. Weight on drivers, 48,000 pounds; on trailers, 28,000 pounds; total, 115,000 pounds. Boiler, 58¾″ diameter; carries 200 pounds steam pressure. Fire-box 9½′ long, 8′ wide, or 76 square feet of grate surface. Heating surface in fire-box, 139 square feet. There are 373 1½″ diameter tubes, 10′ 3″ long, with 1489 square feet; there is also a combustion chamber with 45.5 square feet, or a total heating surface of 1673.5 square feet. Cylinders of the Vauclain compound type, 13″ diameter H. P., 22″ diameter L. P., 26″ stroke.

The type shown by engine 1027 (Fig. 25) was built in 1895. These

were placed in service on the Philadelphia and Atlantic City R. R., and soon made a very good record for themselves. These, however, were not the first locomotives of this type, as some engines had shortly before been built for the Atlantic Coast of this type, but with narrow fire-boxes (Fig. 26). The Philadelphia and Reading engines have boilers $58\frac{3}{4}''$ diameter, carry 200 pounds per square inch working pressure; fire-box 9′ 6″ long, 8′ wide, or 76 square feet grate surface; have 136.4 square

Fig. 25.—Philadelphia and Atlantic City Locomotive 1027.

feet heating surface, 53.8 square feet in a combustion chamber 4′ long and 1644.9 square feet in 278 $1\frac{3}{4}''$ diameter tubes, which are 13′ 0″ long, or a total of 1835.1 square feet of heating surface. Wheel base, rigid 14′ 6″, driving 7′ 3″; total, 26′ 7″ to pass minimum curves of 250 feet radius. Weight on drivers, 78,600 pounds; total, 142,900 pounds.

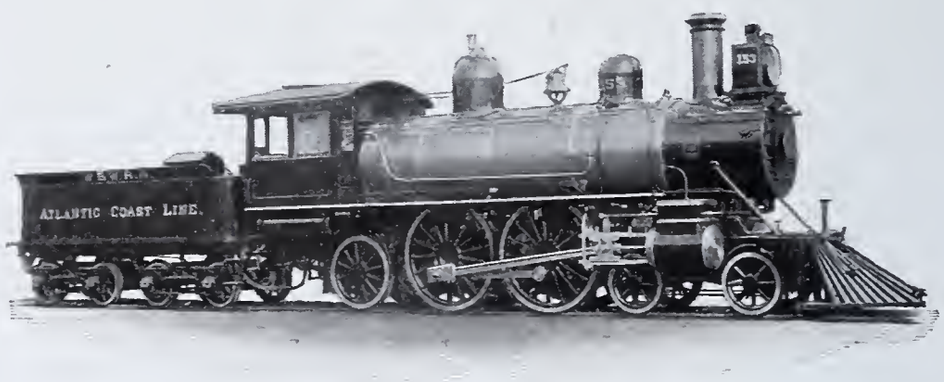

Fig. 26.—Atlantic Coast Line Locomotive.

Another locomotive, built experimentally, at the instance of Mr. L. B. Paxson, for the Philadelphia and Reading R. R., was a double-ender six-wheel coupled locomotive (Fig. 27), designed for suburban service, with the idea that it could be run either end forward and avoid the delay incident to going on the turn-table at each end of the run, and with fuel and water capacity enough to need replenishing at each alternate trip only, the time thus saved in handling the engine at terminals to be used in

accelerating the train service. This engine was built in 1892, but in actual service proved so hard on the road, owing to the long wheel base and the sharp curves on the Chestnut Hill branch, that it was withdrawn from that service and used for general switching for a time, and when the time came to be overhauled it was altered by removing the tank and rear truck and substituting a tender, thus converting it into an ordinary "Mogul" locomotive. Six locomotives of the same type, but with simple cylinders and narrow fire-boxes, were built for the C. R. I. & P. R. R. for the World's Fair traffic to and from Chicago.

The dimensions of 623 were as follows: Weight on drivers, 90,600 pounds; on front truck, 17,600 pounds; on the rear truck, 45,300

Fig. 27.—Philadelphia and Reading R. R. Locomotive 623.

pounds; total weight, 153,500 pounds. Boiler, 60″ diameter; working pressure 175 pounds per square inch. Fire-box 9′ 6″ long, 6′ 8″ wide, or 63.4 square feet grate surface; 321 1½″ tubes, 9′ 0″ long, giving 1124 square feet; combustion chamber 36″ long, giving 40 square feet; fire-box 121 square feet; total heating surface, 1285 square feet. Ratio heating to grate surface, 20.27 : 1. Wheel base, driving, 11′ 0″. Total, 35′ 0″. Cylinders, 12″ H. P., 20″ L. P., stroke 24″. Drivers, 61⅝″ diameter. Journals, 7″ × 10″. Truck wheels, 29¾″ diameter. F. 5 × 8, B. 4½ × 8. Tank, 2000 gallons capacity.

Early in 1892 there was built for the Sinnemahoning Valley R. R., Pa., a locomotive with two complete sets of engines, as will be seen from Fig. 28. Each pair of engines was built complete in itself as re-

gards wheels, cylinders, and framing, and was provided with a center bearing on which the main frame rested in a similar way to which a car body rests on its trucks. The boiler was mounted on this framing and a 900-gallon tank placed back of it in a similar position to an ordinary tender, and on each side of the boiler was placed a rectangular tank of 800 gallons capacity, making a total capacity of 2500 gallons. The steam and exhaust pipes were connected to jacketed mains, alongside the main frame, and the connection to the cylinders was made by "Moran" flexible joints, which are made of cast iron, in shape of a

Fig. 28.—Sinnemahoning Valley R. R. Co.'s Locomotive 3.

ball-and-socket, with provision for setting up the ball in the socket against the pressure of the steam.

The conditions which led to the construction of this locomotive were a railroad with a grade of 575 feet per mile, or 10.89 per cent., with curvatures of 40 degrees, or about 143 feet radius. The track was laid on stringers, which in turn rested between crossties about 20 feet apart, the stringers being made of rough logs. There was allowed a maximum weight per pair of stringers of 35 to 40 tons, and in order to get a heavier locomotive than 40 tons a wheel base of over 20 feet was necessary in order to avoid overloading the stringers. By the plan adopted a flexible wheel base of 27′ 6″ was obtained, which enabled the curves to be easily passed, while the rigid wheel base was only 7′ 6″. The total weight was 150,000 pounds, with 72,000 pounds on the front and 78,000

pounds on the back truck. The effort to distribute the weight equally was the reason for placing three tanks on the main frame, as described above. The boiler was 50″ diameter with 167 2″ tubes 12 feet long, giving 1042 square feet of heating surface; fire-box 66″ long, 47¾″ wide, average depth of 50 inches, giving heating surface of 77 square feet, or total heating surface 1119 square feet. Grate area, 21.7 square feet; or a ratio of 51.6 : 1. Cylinders 9½″ diameter high pressure, 16″ diameter low pressure, 18″ stroke; 7″ piston valves, Vauclain type. Driving wheels 40″ diameter. Journals, 5½″ × 7″. Steam-brakes on all wheels.

After running for some time this locomotive was brought back to the works and broken up. The engines were converted into models showing the Vauclain system, and sent, one to Purdue University and the other to Columbia University. The boiler was used to build a switch-

Fig. 29.—Duplex Locomotive.

ing engine, which has given its owners such good satisfaction that they recently asked for a bid on another one like it.

The principal or chief point of trouble with this engine was the flexible or "Moran" joints, which, being cast-iron hollow spheres, would bind so tight at times that the fastening of the fixed ends of the pipes would be broken.

The duplex locomotive (Fig. 29) was designed with a view of meeting the same conditions of traffic as are now performed by the well-known Mallet articulated locomotives, the Meyer "Double Bogie" locomotives, and the Fairlie locomotives. The object in view was to obtain simplicity of construction, cheapen the first cost or selling price, and at the same time obtain maximum efficiency.

It will be observed that the locomotive is composed of two separate and exactly similar engines connected end to end at the fire-box or back

bumper. The medium is merely the ordinary draw-bar connection commonly used between engines and tenders, except that it is made of great strength compared to the work required of it (Fig. 30).

The holes have clearance space next the draw pins to permit the strains to pass through the buffers when the engine is used as a pusher, and small bearing strips are provided, as shown by accompanying illustration, immediately above the bar to prevent unusual tipping of the engines at their point of connection.

The throttle rigging is arranged to enable the engineer to control both engines from one position.

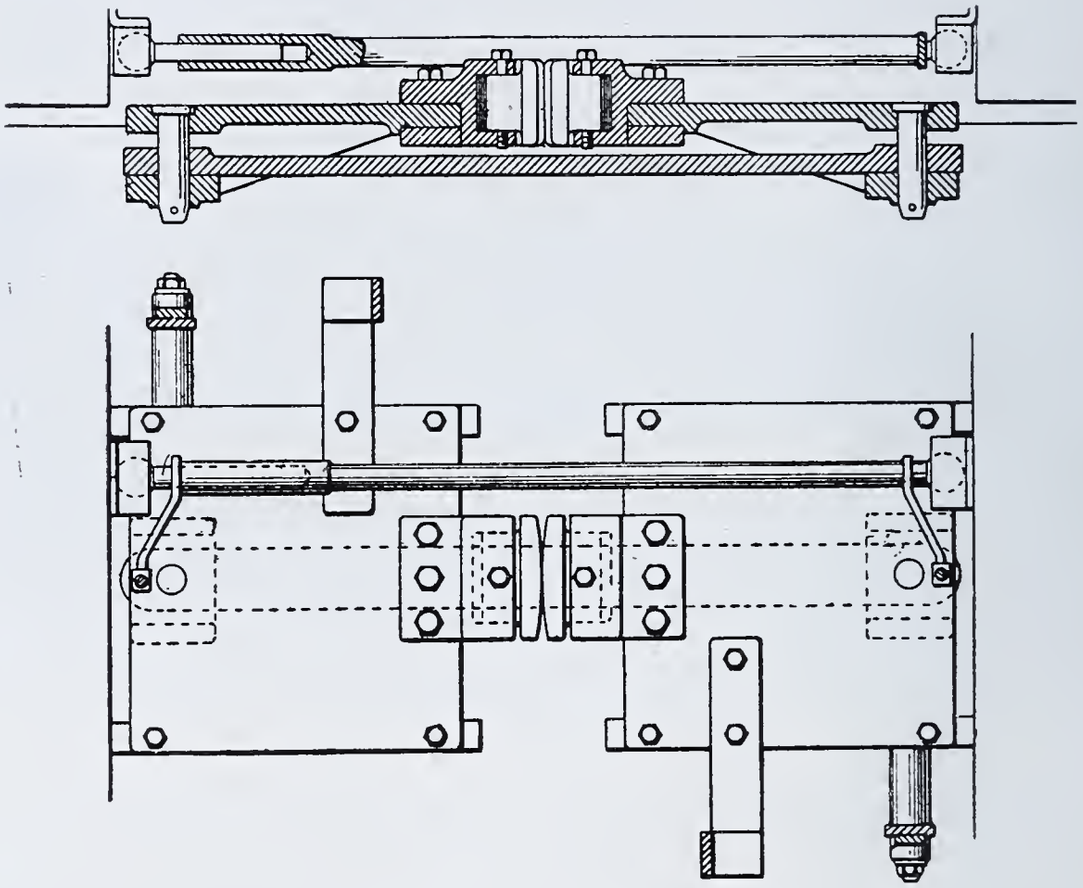

Fig. 30.—Detail of Draw-bar.

Referring to the illustrations Figs. 31 and 32, it will be observed that the throttle levers are made of the crank pattern, opening as they are pulled to the right or toward the engineer. Two levers are provided for each engine. One is fast to the throttle rod of its engine, and the other is connected across to the other engine by various rods and other mechanism, so adjusted that the position of the lever or the length of its connections is not materially altered, no matter what position the engines may assume on the track in relation to each other. With this arrangement the two levers may be used separately by the engineer, or they may be locked together and used as a single lever, opening or clos-

ing the throttles of both engines simultaneously, thus giving the engineer perfect control of both engines while looking in the direction in which the locomotive is moving.

The reversing mechanism, as shown in Figs. 31 and 32, has also been arranged in duplicate; that is, one lever on each engine always coupled to the lever of the other engine. Unlike the throttle, they can-

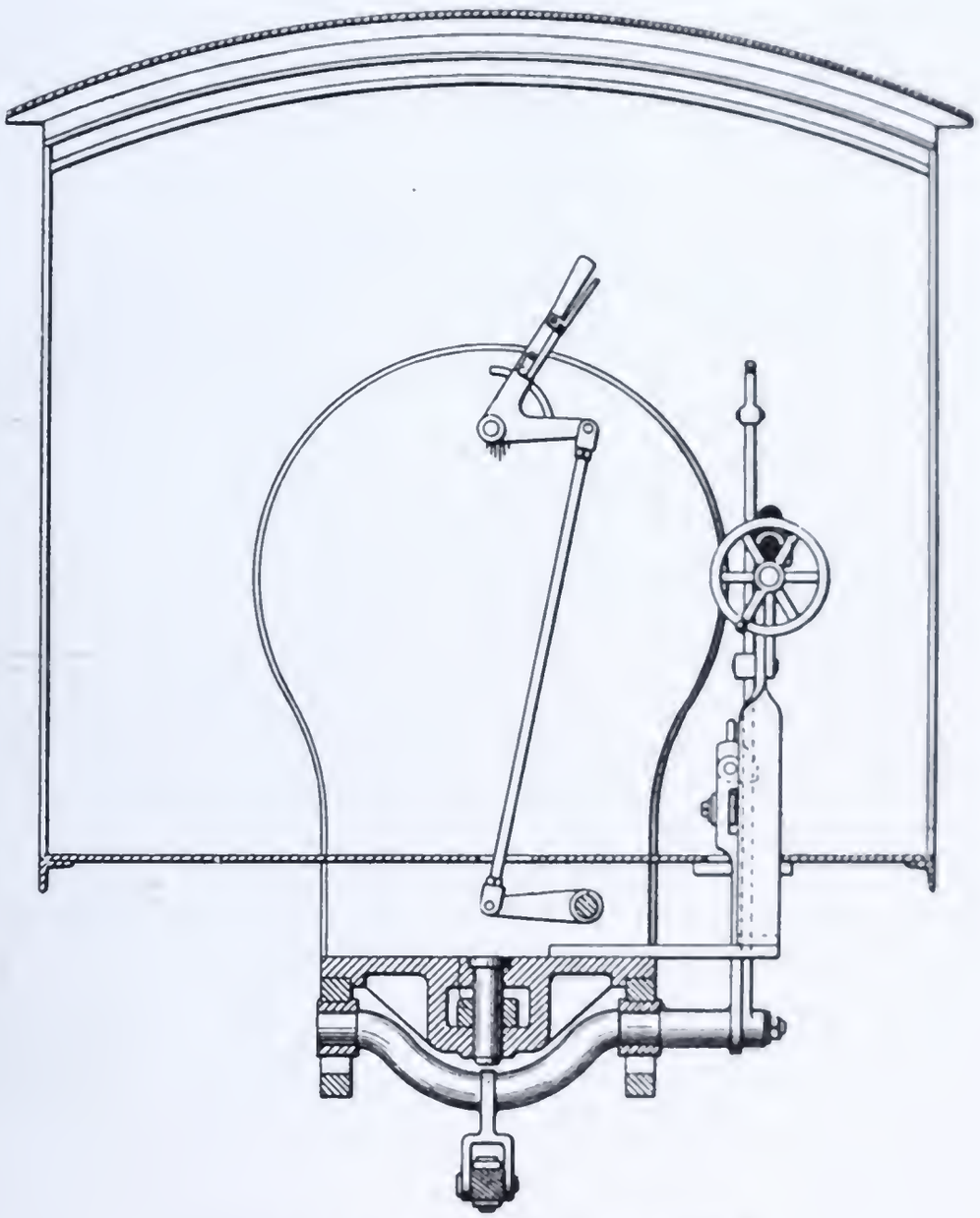

Fig. 31.—Detail of Throttle Levers.

not be handled separately, provision being made to hold up the latch of the lever on the rear or unattended engine, so that it can be operated by the lever of the other engine as shown. The connecting device between the two engines for the reverse levers is so arranged as to be centrally parallel with and below the draw-bar, and of exactly the same length.

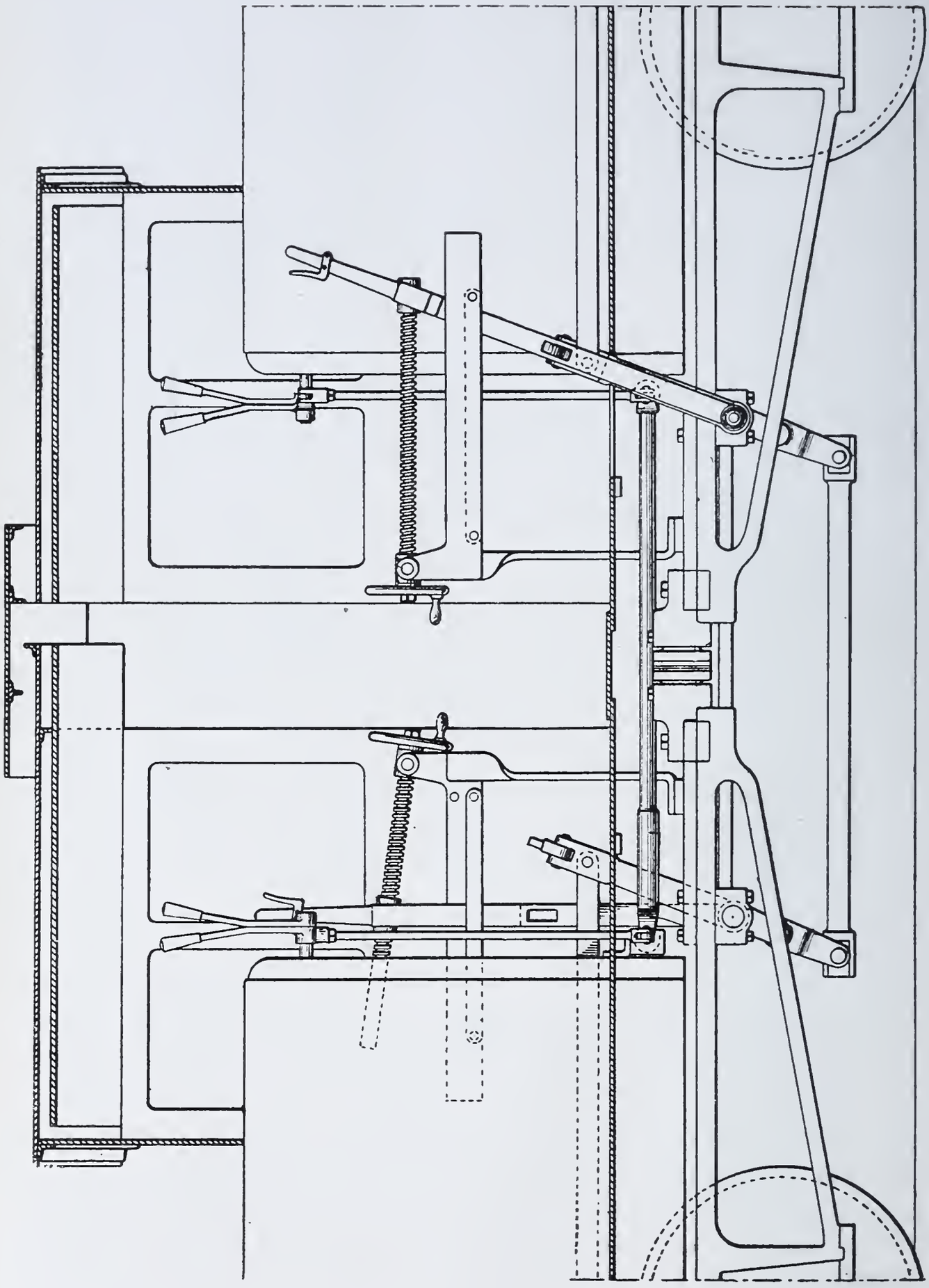

FIG. 32.—REVERSE LEVER.

By this means the action is positive and the valve gear is not affected by the curving of the locomotive.

Protection for the engine crew is provided for in the regular manner, by placing a cab on the back end of each engine and providing a covering over their roofs where they join to prevent entrance of rain, and covering the connection of their floors by a sheet of iron. In case of necessity, the sides can be connected by a closed connection similar to car vestibules.

The fuel is carried on the left side of each engine, and if the fuel is wood, it can be arranged as shown, but if coal is used, the water capacity can be increased and sufficient fuel carried in suitable bunkers placed ahead of back end of boiler on left side of each engine.

It is sometimes desirable to use such a locomotive when the traffic is heavy, the grades and curves severe, and the line difficult to operate; but after improvements in the track and roadbed, such a locomotive may become undesirable. With any of the types heretofore used, a change of type is impossible, but with this locomotive by merely removing the draw-bar pins and connections between throttle levers and reverse levers, two separate locomotives are at once obtained, either of which can be operated independently as a shunter, or, if provided with a tender, at small cost can be converted into a road locomotive.

In the duplex locomotive there are no flexible steam-pipe joints to be taken care of; the path of the steam is as direct as in the ordinary locomotives, and not subject to the same conditions as in other types, thus avoiding much condensation and loss of fuel.

Outside steam pipes and outside throttles are avoided.

Owing to the flexibility of the connection there is less resistance to curvature than in any other of the three types mentioned. The Meyer and Fairlie locomotives with their double trucks, and the Mallet locomotive with one rigid and one hinged framing, do not give equal flexibility on curves. The description of these engines is as follows:

Boilers, 46″ diameter; working steam pressure, 200 pounds per square inch. Fire-box 53 $\frac{11}{16}$″ long, 34$\frac{3}{8}$″ wide, or 12.8 square feet grate surface. Tubes 136, 2″ diameter, 12′ 9″ long, or 902 square feet, added to 74″ in fire-box, gives a total heating surface of 976 square feet. Ratio of heating to grate surface, 75 : 1. Wheel base each engine, 9′ 9″; total wheel base when coupled, 38′ 4″. Weight of one engine under steam is 80,700 pounds, or total weight when coupled of 161,400 pounds, designed to haul 125 tons of 2000 pounds up 7 per cent. grades. Cylinders, 11$\frac{1}{2}$″ diameter H. P., 19″ diameter L. P., stroke 20″. Drivers,

40″ diameter. Journals, $6\frac{1}{2}'' \times 8''$. Steam-brakes on drivers, Westinghouse air-brake for train, with Le Chatelier brake on the cylinders. Tanks 1200 gallons each. Fuel bunkers 190 cubic feet each.

Following are the general dimensions of the compound "Decapod" locomotive built by the Baldwin Locomotive Works for the Minneapolis, St. Paul and Sault Ste. Marie Railway Company (Fig. 33): Gauge 4′ $8\frac{1}{2}''$. Cylinders: diameter (high pressure), 17″; diameter (low pressure), 28″; stroke, 32″; valve, balanced piston. Boiler: diameter, 68″; thickness of sheets, $\frac{11}{16}''$ and $\frac{3}{4}''$; working pressure, 215 pounds; fuel, soft coal. Fire-box: material, steel; length, $131\frac{15}{16}''$; width, $41\frac{1}{8}''$; depth, front, $77\frac{3}{8}''$; depth, back, 76″. Tubes: number, 344; diameter, 2″; length, 15′ 7″. Heating surface: fire-box, 223.9 square feet; tubes, 2791.8 square feet; total, 3015.7 square feet; grate area, 37.5 square feet. Driving wheels: diameter outside, 55″; diameter of center, 48″; journals,

Fig. 33.—Soo Line Decapod Locomotive.

main, $9\frac{1}{2}'' \times 12''$; journals, others, $8\frac{1}{2}'' \times 12''$. Engine truck wheels: diameter, 30″; journals, $6'' \times 10''$. Wheel base: driving, 19′ 4″; total engine, 28′ 0″; total engine and tender, 57′ 4″. Weight: on drivers, 184,360 pounds; on truck, 22,850 pounds; total engine, 207,210 pounds; total engine and tender, 327,000 pounds. Tender: Diameter of wheels, 33″; journals, $5\frac{1}{2}'' \times 10''$; tank capacity, 7000 gallons; tank capacity, 9 tons coal. Service: Guaranteed to haul a train weighing 2000 tons (of 2000 pounds) exclusive of engine and tender up a grade of 42 feet per mile at a speed of 6 miles per hour; curve resistance not taken into consideration.

The general dimensions of the compound "Atlantic" type locomotive built by the Baldwin Locomotive Works for the Baltimore and Ohio Railroad Company (Fig. 34) are as follows: Gauge 4′ $8\frac{1}{2}''$. Cylinders: diameter (high pressure), 15″; diameter (low pressure), 25″; stroke, 28″; valve, balanced piston. Boiler: diameter, 62″; thick-

ness of sheets, $\frac{11}{16}$″ and $\frac{5}{8}$″; working pressure, 200 pounds; fuel, soft coal. Fire-box: material, steel; length, 101 $\frac{5}{16}$″; width, 60$\frac{1}{8}$; depth, front, 64″; depth, back, 62″. Tubes: number, 300; diameter, 2″; length, 16′ 1″. Heating surface: fire-box, 150 square feet; tubes, 2513 square feet;

Fig. 34.—Baltimore and Ohio R. R. Atlantic Type Passenger Locomotive.

total, 2663 square feet; grate area, 42.5 square feet. Driving wheels: diameter outside, 78″; diameter of center, 72″; journals, 8$\frac{1}{2}$″ × 12″. Engine truck wheels: diameter, 33″; journals, 5$\frac{1}{2}$″ × 10″. Trailing wheels: diameter, 48″; journals, 8$\frac{1}{2}$″ × 12″. Wheel base: driving,

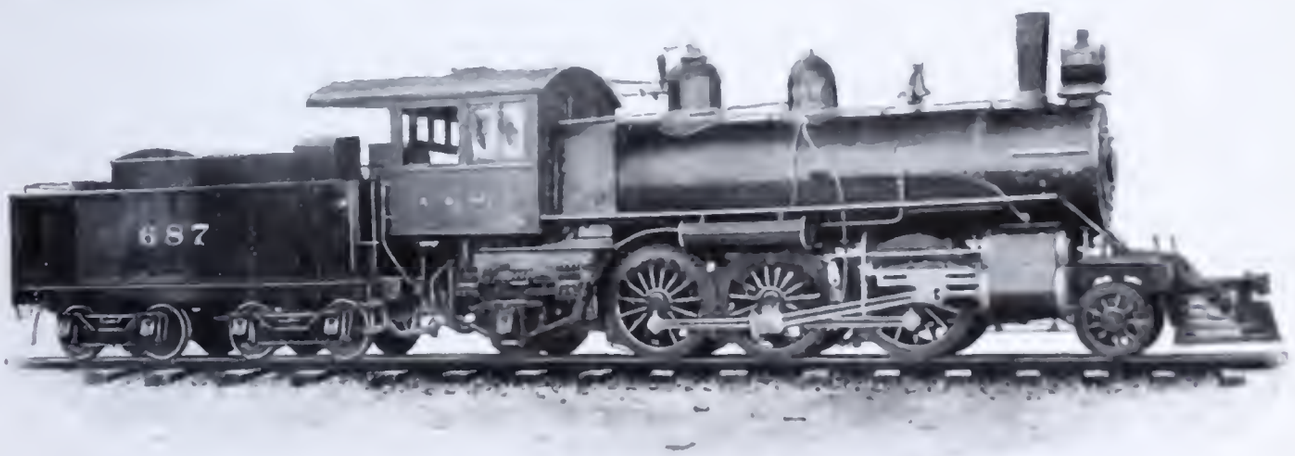

Fig. 35.—Prairie Type Locomotive.

6′ 9″; rigid, 13′ 6″; total engine, 25′ 7″; total engine and tender, 52′ 6$\frac{1}{2}$″. Weight: on drivers, 83,400 pounds; on truck, 37,940 pounds; on trailing wheels, 28,260 pounds; total engine, 149,600 pounds; total engine and tender, 249,000 pounds. Tender: diameter of wheels, 36″; journals, 5″ × 9″; tank capacity, 5000 gallons. Service: fast passenger.

Guide bars cast steel, channel section. Piston heads malleable iron, designed so as to save weight as much as possible.

Prairie type: Built this year, first delivery being in April, for the C. B. & Q. R. R., whose mechanical officers worked out the first design, and where the first engine was built. Fifty ordered, 6 compound Vauclain type and 44 simple. Boiler, $56\frac{1}{4}''$ diameter; working steam pressure, 200 pounds per square inch. Fire-box 84″ long, 72″ wide, or 42 square feet grate surface and 155.8 square feet heating surface. Tubes 272, $2\frac{1}{4}''$ diameter $\times$ 17′ $1\frac{1}{16}''$ long, giving 2732.7 square feet.

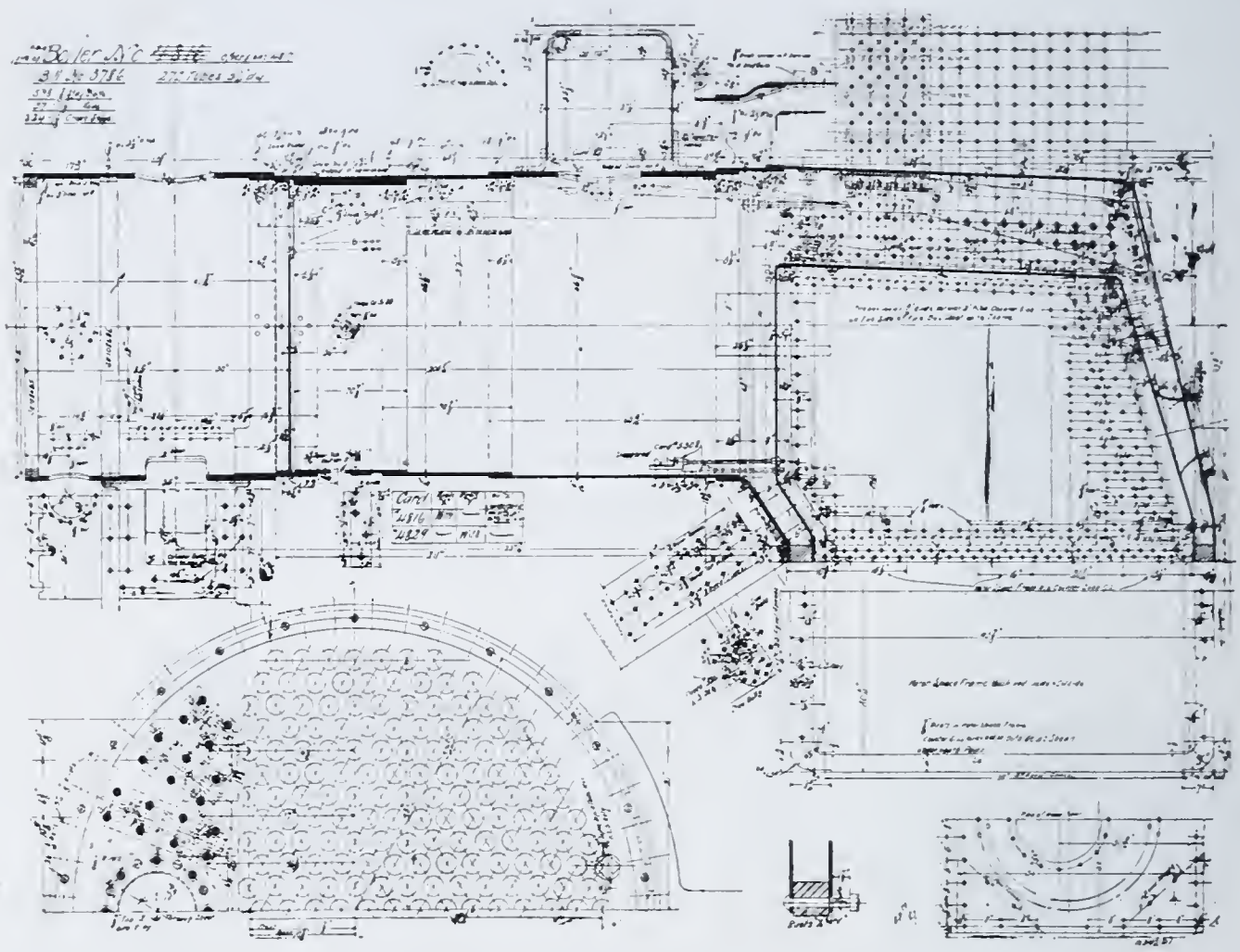

Fig. 36.—Prairie Type Boiler.

Total heat surface, 2888.5 square feet. Wheel base, driving 12′ 1″; total, 28′ 0″ simple and 28′ 1″ on compounds. Cylinders, 20″ $\times$ 24″ on simple. Drivers, 64″. Trailers, 37. Truck wheels, 37″. Driving journals, 9″ $\times$ 10″. Trailing journals, 6″ $\times$ 10″, with outside bearings 6′ 6″ centers, transversely. The main framing stops just in front of the fire-box and has bolted to it a heavy steel casting strongly ribbed and bracketed, to which the rear frames in turn are bolted, providing supports for the fire-box, foot-plate, and pulling rigging. This arrangement gives an ample grate surface which is of convenient pro-

portions for the fireman to work at the fire. The compounds are the same as the simple engines, except for the cylinders and necessary attachments. Cylinders, 16″ H. P., 27″ L. P., 24″ stroke.

Attention is directed to the boiler (Fig. 36), on account of the method used to keep the length of tubes down, by offsetting the tube sheet and throat, and also to the decrease of weight at the rear end by sloping the back of the fire-box which, with the increased width, due to the use of a trailer, are recent developments in the design of locomotive boilers, the use of which may be predicted to become more popular in the future. These unusual locomotives are not all that might have been shown, but are, with the exception of the "single" engine of 1880, locomotives that have been built under the observation of the writer, and a number, though not all, from designs worked out by him.

DISCUSSION.

Carl Hering.—It would be interesting to have Mr. Eddowes explain how those rack-and-pinion locomotives are made to descend with a load, and how the enormous amount of energy that is set free on a very long, steep down grade is dissipated.

A. B. Eddowes.—In that case they are amply provided with brakes. They are all provided with the hand brake, which is operated by a screw, which gives a great deal of power through an ordinary brake shaft. In addition to that, there is also a band brake, operated by power generated through a steam cylinder, on the crank discs. There is also what we call a back-pressure pipe. The engine, in descending, is not reversed; that is, the links are in the position to be in in ascending a hill, and this pressure device has an arrangement whereby the exhaust can be closed. There is an air valve provided so air can enter the steam cylinder and be pumped back into the back-pressure pipe. The back-pressure pipe on Pike's Peak Railway can be pumped up to a pressure of 240 pounds per square inch, and the engine would stop, there being too much resistance, and it was entirely practicable to control the engine by this means.

Edgar Marburg.—I should like to ask Mr. Eddowes whether any marked progress has been made within the last few years in balancing the reciprocating parts and rotating parts jointly, so as to prevent hammer-blows at high speeds, which are so injurious to the track, especially at culverts and bridges.

Mr. Eddowes.—There is more care taken in the mechanical execution of the wheel balance now. It is very difficult to figure out closely the balance weights required, and they are now checked up so as to insure the calculated weight. The balances are generally cast hollow and a portion of lead put in to balance to a specified weight. The amount of balance required is about the same as has always been used, balancing two-thirds of the reciprocating parts where it is possible to do it. In small wheels it is not always possible to fully balance according to the rule.

Mr. Marburg.—I wished to ask whether any marked advance had been made

in the methods of counterbalancing. Thus, experiments some years ago on a captive engine run at a speed of about sixty miles an hour showed that the weight on the drivers was wholly neutralized alternately; that is, all the weight on an axle was momentarily borne on a single driver. This was, of course, due to imperfect counterbalancing. I should like to know whether the difficult problem of counterbalancing both the reciprocating and rotating parts has been more satisfactorily solved in recent practice.

Mr. Eddowes.—No, I can't say there is any very marked progress made, except in the high-speed engines an effort is made to reduce the reciprocating parts to the minimum. As I spoke of the B. & O., the pistons are made of malleable iron and the rods bored hollow. I do not think any special change has been made by which the balancing of the locomotive is done.

L. Y. Schermerhorn.—While not exactly pertinent to the subject of the evening, I would like to ask Mr. Eddowes whether it is the locomotive builder or user who objects to the use of anthracite coal.

Mr. Eddowes.—I think it would be altogether the locomotive user, principally because anthracite coal generally costs more than bituminous coal. I think there is no practical difference in the cost of hard or soft coal locomotives—not more than a few hundred dollars in a machine costing twelve or fifteen thousand.

The President.—Perhaps the author of the paper will tell us something about locomotives using liquid fuel.

Mr. Eddowes.—I might have done so. The oil burner is a very simple affair. Almost any coal-burning locomotive could be fitted with a device of that character.

Walter L. Webb.—Why is it that those engines have not been used in this country, whereas they have been used in Europe?

Mr. Eddowes.—It is owing to the price of oil. I did know at one time the comparative figure at which it would pay to burn oil compared with the price of coal. I think it would be equivalent to coal at two dollars a ton and oil at fifty cents a barrel. I think it was something in that proportion. The subject has been investigated and will probably be applied in a very extensive manner in the near future owing to the opening and development of the new Texas oil fields. That oil seems to be very suitable for such uses as operating locomotives. It seems to be somewhat of the character found in southern Russia, where it is used for all kinds of locomotives.

A Member.—I would like to ask Mr. Eddowes whether he is familiar with producing gas put up for locomotives.

Mr. Eddowes.—I have not had any experience with that as yet.

A Member.—I saw drawings showing two gas producers mounted on a car, two gas engines, and the ordinary apparatus which goes with it—lifting machinery for the coal, the same as an ordinary gas plant on land. The inventor was quite sanguine. He was a wealthy man, and his family backing it up also had large means, and I have no doubt but that they will put it into practice some day.

Mr. Eddowes.—I am discouraged as to the use of the gas engine for locomotives. I think it might be practical at some time if the development in hydrocarbon work continues. I understand hydrocarbon motor cars, built to run on common roads, approximate about fifty miles an hour with motors of 50 horse-power. It would seem practical, especially where light locomotives are required.

A MEMBER.—Some of these plants are running with fuel at only the cost of handling, and that comparatively leaves quite a margin for sale. This car with the apparatus, I think, was designed to give 400 horse-power. Of course, you can figure what they would save.

MR. EDDOWES.—Speaking of gas producer cars, locomotives with wide fire-boxes, which have become quite common in the last few years, have done and still do burn the refuse from the mines, which is of no other use at all. They cannot otherwise get rid of it, and a great deal has been burned up in locomotives which are constructed to burn just that kind of fuel. I would think that, from a practical standpoint, the refuse could be handled more economically in the steam locomotive boiler designed for that class of fuel than by the producer process.

ABSTRACT OF MINUTES OF THE CLUB.

Business Meeting, September 21, 1901.—The President in the chair. Fifty-two members and seven visitors present.

Announcement was made that the Board of Directors had adopted and ordered to be entered on the minutes an expression of sorrow for the assassination of William McKinley, President of the United States.

The death of Brigadier-General William Ludlow (for several years an active member of this Club, and its President during the year 1884) was announced.

Mr. Percy H. Wilson presented a paper on "The Protection of Lowlands against Tidal Overflow." The subject was discussed by Messrs. L. Y. Schermerhorn, Henry G. Morris, and others.

The Tellers reported the election of Messrs. E. H. Mumford, Edward L. Reynolds, and C. E. Schermerhorn to active membership, and A. M. Loudenslager to associate membership.

Regular Meeting, October 5, 1901.—The President in the chair. Forty-five members and four visitors present.

Mr. A. B. Eddowes read a paper on "Some Unusual Locomotives." The subject was discussed by Messrs. Carl Hering, Edgar Marburg, Henry Leffmann, L. Y. Schermerhorn, and others.

ABSTRACT OF MINUTES OF THE BOARD OF DIRECTORS.

Regular Meeting, September 21, 1901.—Present: The President, Vice-Presidents Schermerhorn and Smith, Directors Christie, Hewitt, Comfort, Riegner, and the Secretary.

The Treasurer's report showed:

Balance, June 1,		$2194.23
Receipts:		
June,	$177.40	
July,	223.50	
August,	54.85	455.75
		$2649.98
Disbursements:		
June,	$328.82	
July,	525.54	
August,	204.40	1057.76
Balance, September 1, 1901,		$1592.22

The Information and House Committees were requested to jointly prepare a plan for celebrating the anniversary of the Club's foundation on the date of the second stated meeting in December.

ADDITIONS TO GENERAL LIBRARY.

From Theodore B. Klein, Harrisburg, Pa.

The Canals of Pennsylvania and the System of Internal Improvements, 1901.

From Theodore Cooper, New York.

General Specifications for Steel Highway and Electric Railway Bridges and Viaducts, 1901.

From Bureau of Surveys, Philadelphia.

Annual Report, 1901.

From Wm. L. Prather, President, University of Texas, Austin.

Bulletin No. 5. Texas Petroleum. W. B. Phillips, 1900.

From Harvey Linton, City Engineer, Altoona, Pa.

Municipal Report, City of Altoona, 1901–2.

From Emil L. Nuebling, Reading, Pa.

Thirty-sixth Annual Report of Board of Water Commissioners, Reading, Pa., 1901.

From Wilhelm Braumüller, Vienna, Austria.

Siedek, Studie über eine neue Formel, etc., des Wassers in Flüssen und Strömen, 1901.

From Geo. B. Hartley, Philadelphia.

Details of Construction of the Niclausse Boiler.

From Chief of Engineers, U. S. Army, Washington, D. C.

Professional Papers No. 28, Testing Hydraulic Cements, 1901.

From John Birkinbine, Philadelphia.

The Production of Iron Ores in 1900.

The Production of Manganese Ores in 1900.

From Commissioner of Education, Washington, D. C.

Report for the year 1899–1900.